FIG.13

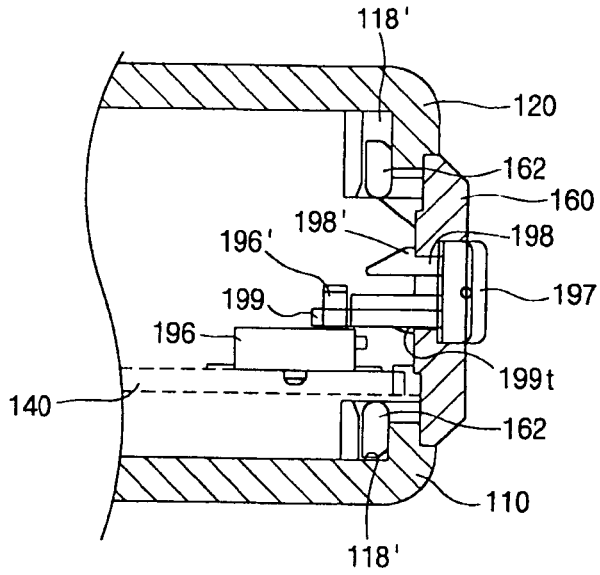
118'
120
162
160
198'
198
196'
197
199
196
199t
140
162
110
118'

FIG.14

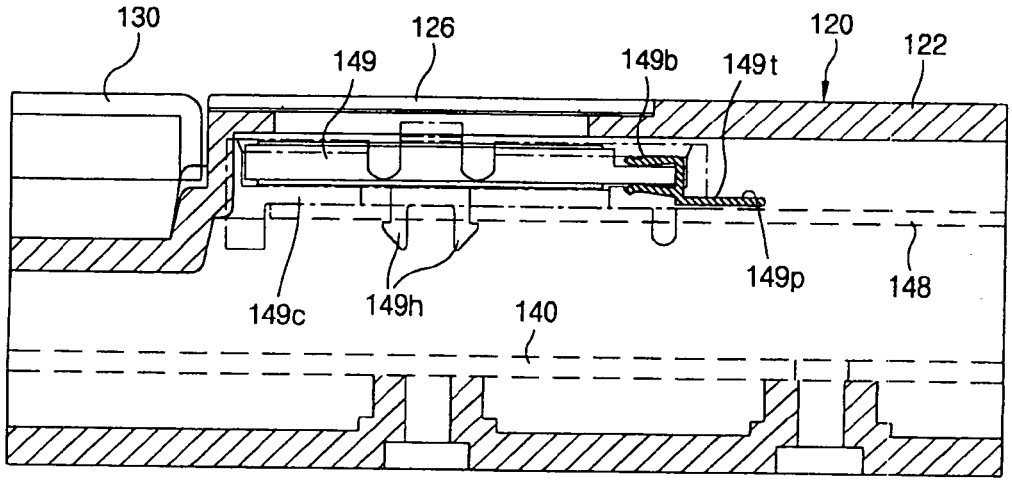
130
126
120
122
149
149b
149t
149p
148
149c
149h
140