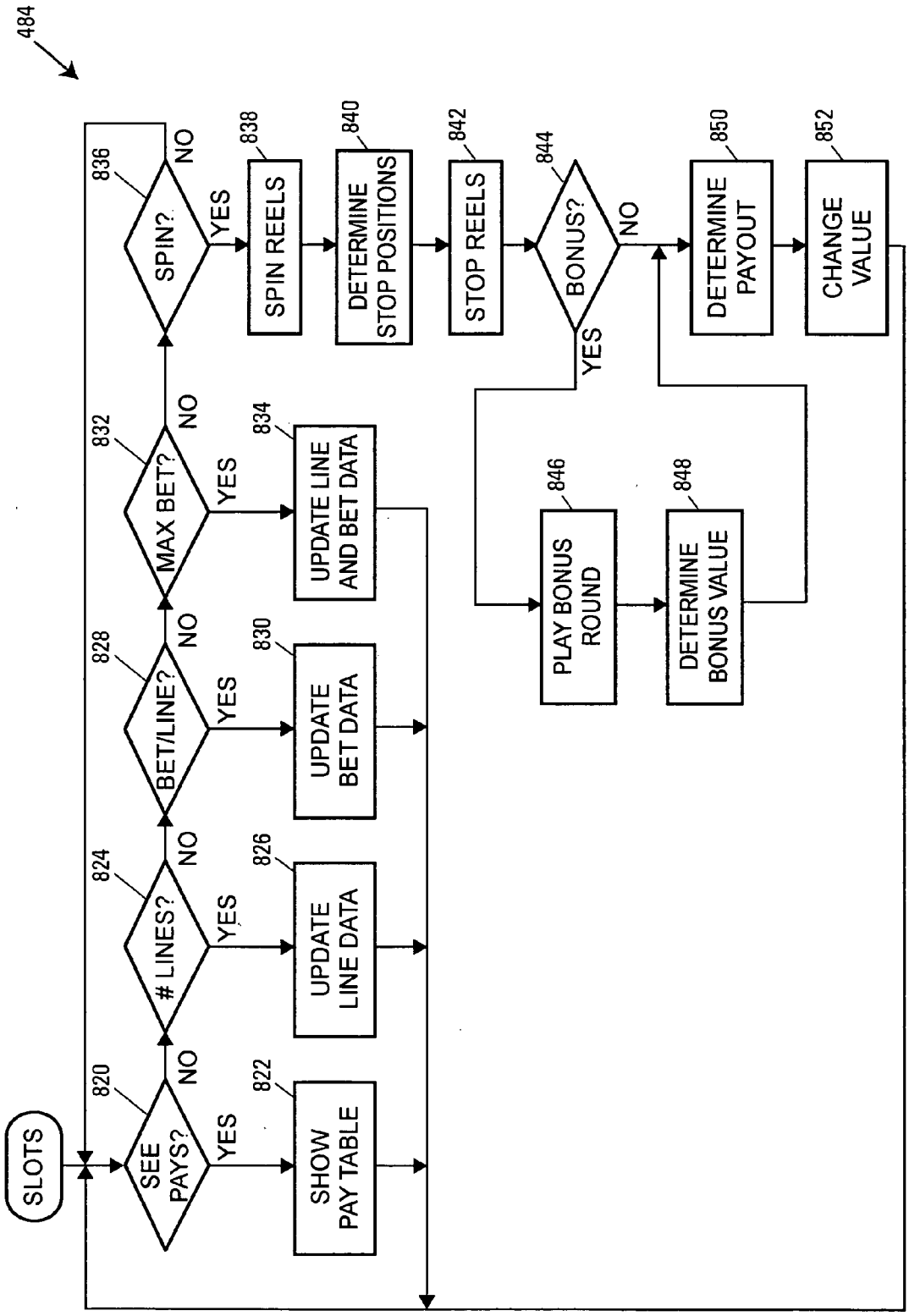
484
SLOTS
820
SEE PAYS?
YES
NO
822
SHOW PAY TABLE
824
LINES?
YES
NO
826
UPDATE LINE DATA
828
BET/LINE?
YES
NO
830
UPDATE BET DATA
832
MAX BET?
YES
NO
834
UPDATE LINE AND BET DATA
836
SPIN?
YES
NO
838
SPIN REELS
840
DETERMINE STOP POSITIONS
842
STOP REELS
844
BONUS?
YES
NO
846
PLAY BONUS ROUND
848
DETERMINE BONUS VALUE
850
DETERMINE PAYOUT
852
CHANGE VALUE

FIG. 18