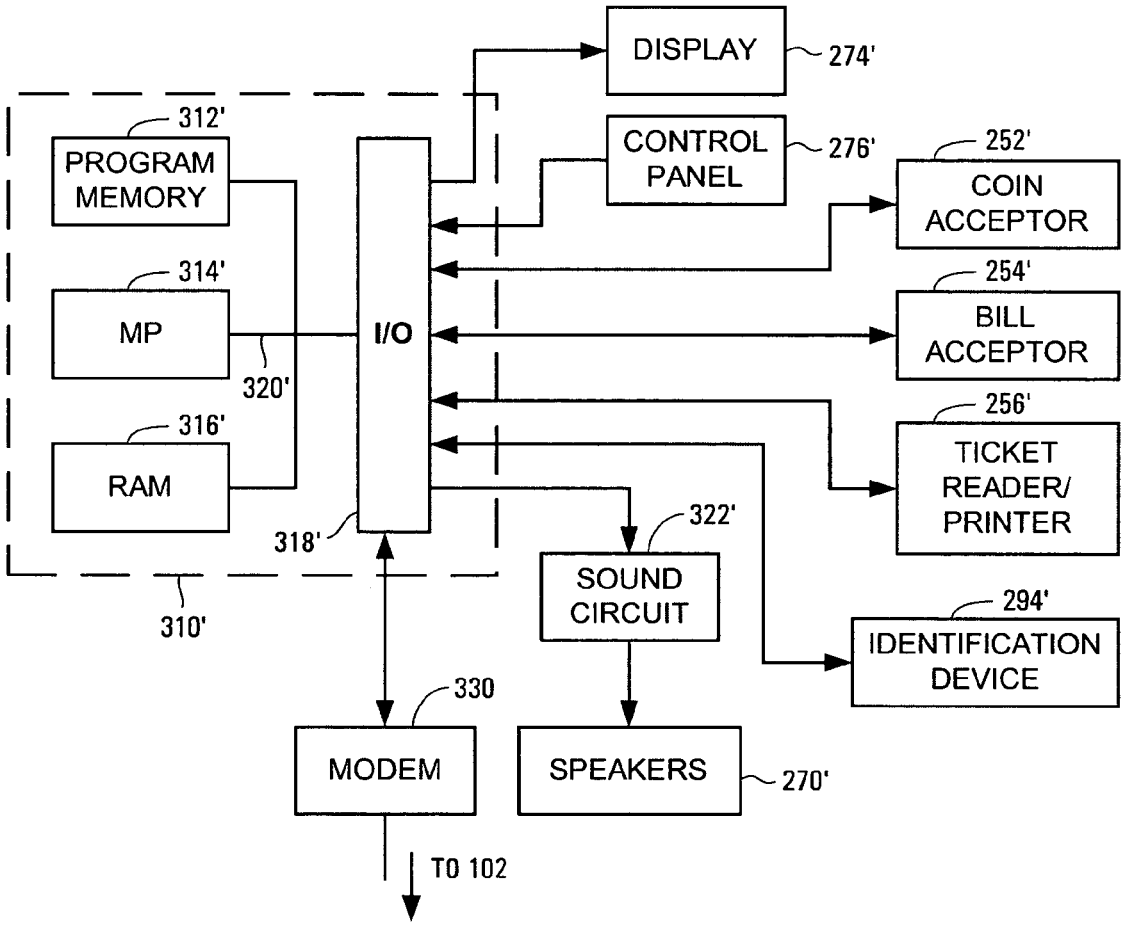
DISPLAY
274'
CONTROL PANEL
276'
312'
PROGRAM MEMORY
314'
MP
320'
316'
RAM
I/O
318'
310'
252'
COIN ACCEPTOR
254'
BILL ACCEPTOR
256'
TICKET READER/ PRINTER
322'
SOUND CIRCUIT
294'
IDENTIFICATION DEVICE
330
MODEM
SPEAKERS
270'
TO 102

FIG. 3A