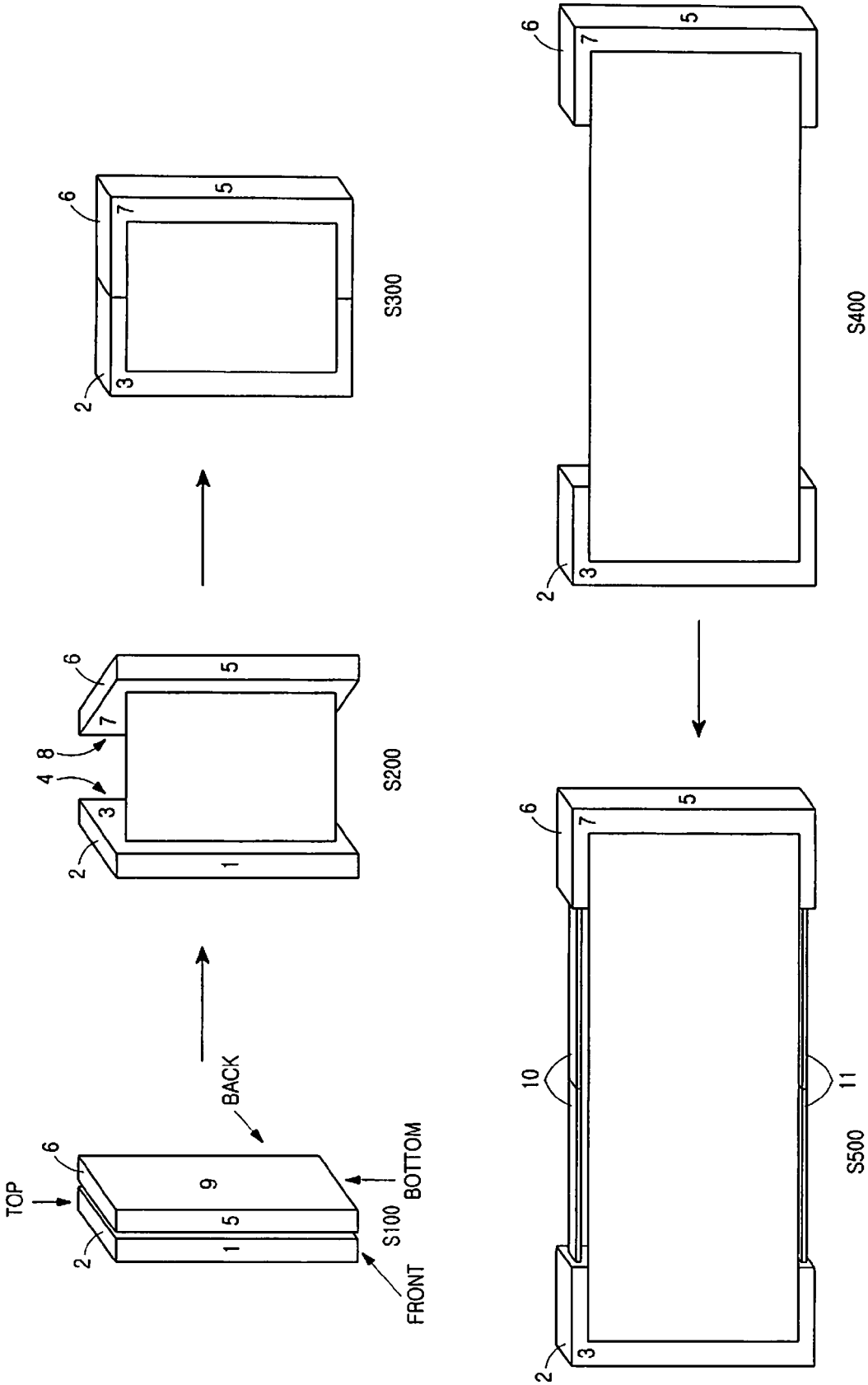
TOP
BACK
BOTTOM
FRONT
S100
S200
S300
S400
S500
1
2
3
4
5
6
7
8
9
10
11

FIG. 1