US 20110157080A1

(19) United States

(12) Patent Application Publication

Ciesla et al.

(10) Pub. No.: US 2011/0157080 A1

(43) Pub. Date: Jun. 30, 2011

(54) USER INTERFACE SYSTEM

(76) Inventors: **Craig Michael Ciesla**, Mountain View, CA (US); **Micah B. Yairi**, Palo Alto, CA (US); **Nathaniel Mark Saal**, Palo Alto, CA (US)

(21) Appl. No.: **12/975,337**

(22) Filed: **Dec. 21, 2010**

Related U.S. Application Data

(63) Continuation-in-part of application No. 12/497,622, filed on Jul. 3, 2009, which is a continuation-in-part of application No. 11/969,848, filed on Jan. 4, 2008, which is a continuation-in-part of application No. 12/319,334, filed on Jan. 5, 2009.

(60) Provisional application No. 61/288,826, filed on Dec. 21, 2009.

Publication Classification

(51) **Int. Cl.**

G06F 3/041	(2006.01)
G08C 21/00	(2006.01)
G06F 3/045	(2006.01)

(52) **U.S. Cl.** **345/174**; 345/173; 178/18.01

(57) **ABSTRACT**
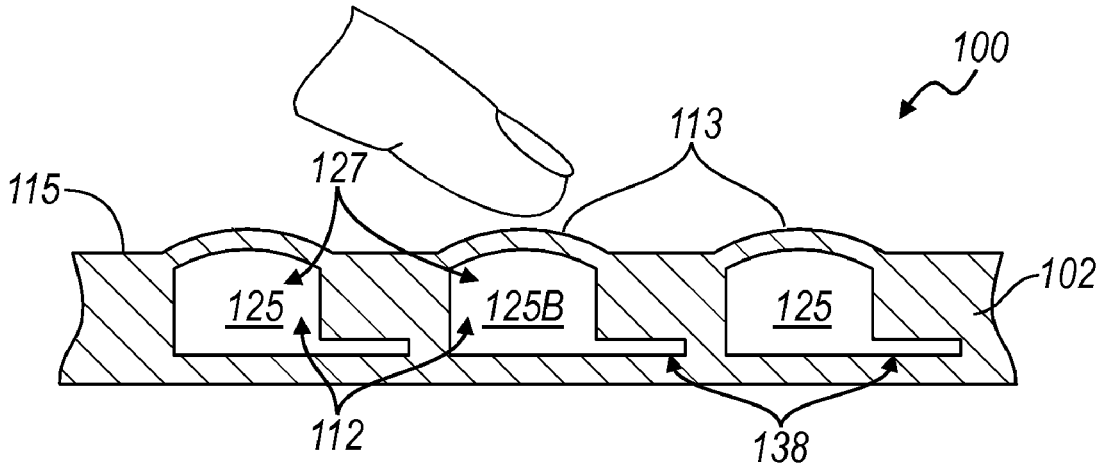
Disclosed is a user interface system that includes a sheet that defines a surface and at least partially defines a fluid vessel arranged underneath the surface, a volume of fluid within the fluid vessel, a displacement device that influences the volume of the fluid within the fluid vessel to expand and contract at least a portion of the fluid vessel, thereby deforming a particular region of the surface, and a sensor system that is configured to receive a user input on the surface with a first sensitivity and configured to receive a user input substantially proximal to the particular region of the surface at with second sensitivity higher than the first sensitivity.