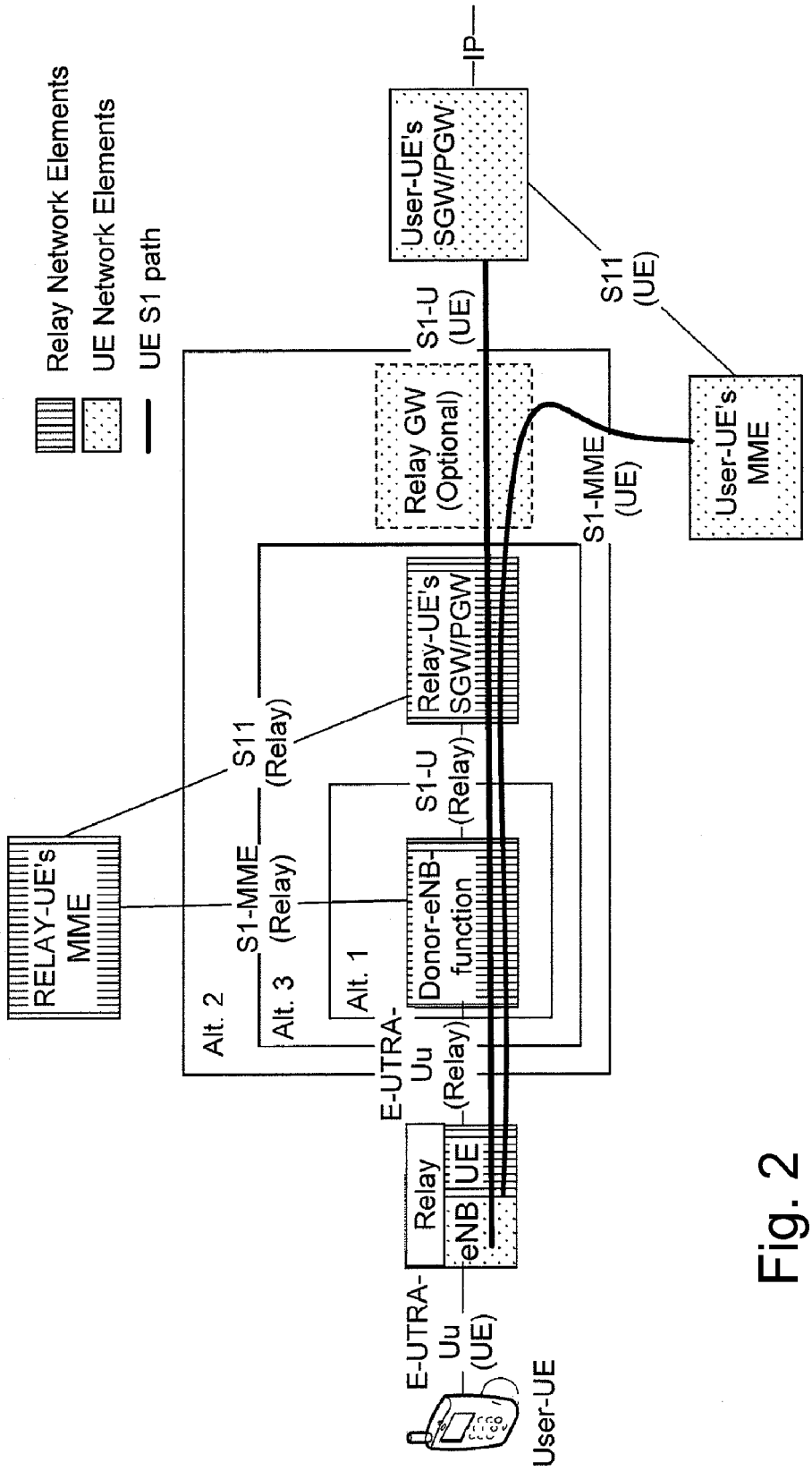
Relay Network Elements
UE Network Elements
UE S1 path
RELAY-UE's MME
S11 (Relay)
S1-MME (Relay)
Alt. 2
Alt. 3
Alt. 1
Relay-UE's SGW/PGW
S1-U (Relay)
Donor-eNB-function
E-UTRA-Uu (Relay)
Relay
eNB
UE
E-UTRA-Uu (UE)
User-UE
Relay GW (Optional)
S1-U (UE)
User-UE's SGW/PGW
IP
S1-MME (UE)
S11 (UE)
User-UE's MME

Fig. 2