FIG.1

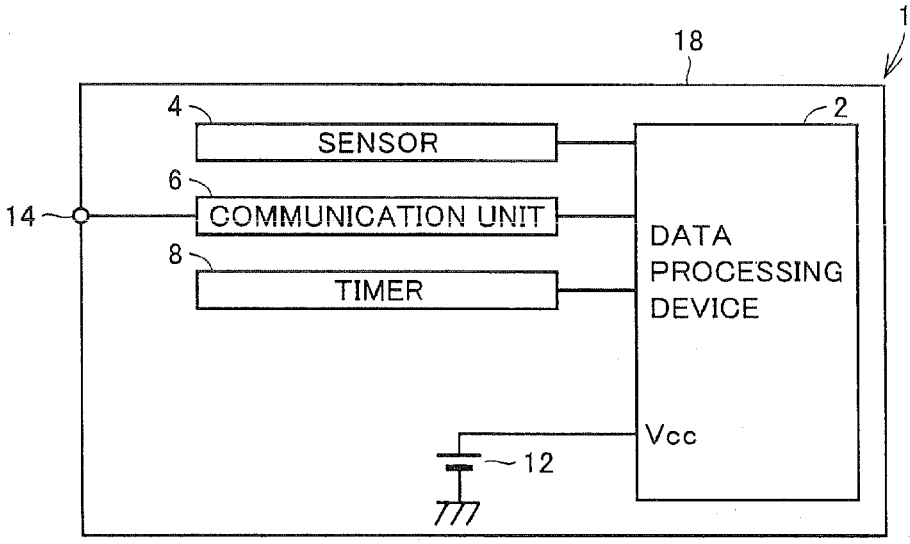
1
18
4
SENSOR
2
6
14
COMMUNICATION UNIT
8
TIMER
DATA
PROCESSING
DEVICE
Vcc
12

FIG.2

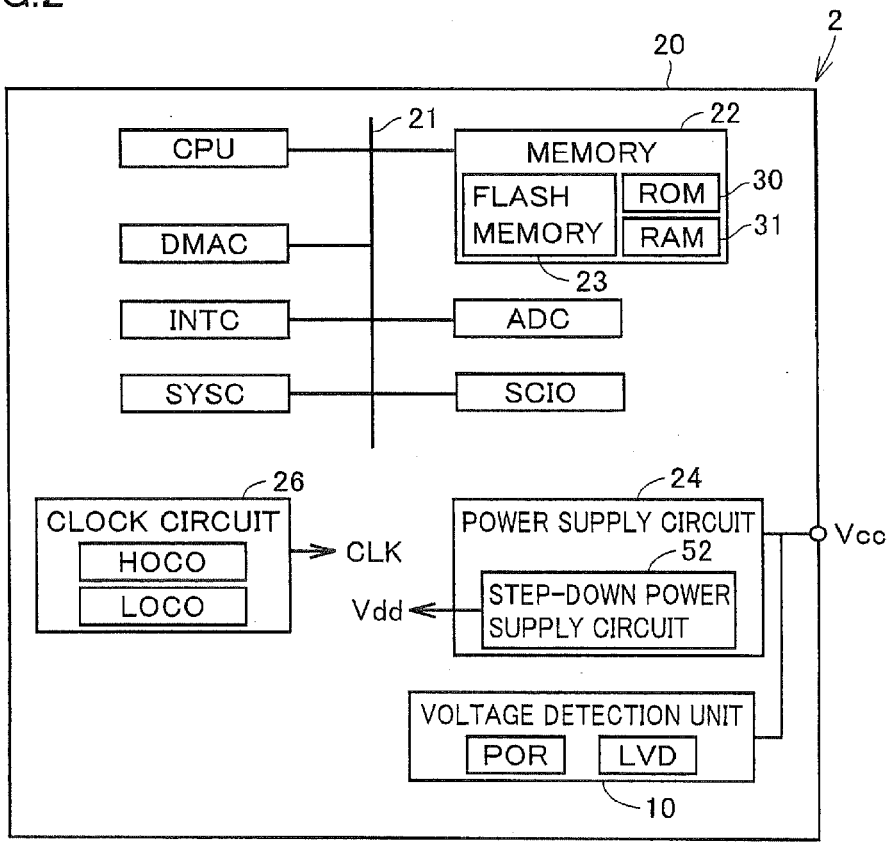
2
20
21
22
CPU
MEMORY
FLASH
MEMORY
ROM
RAM
30
31
DMAC
23
INTC
ADC
SYSC
SCIO
26
24
CLOCK CIRCUIT
HOCO
LOCO
CLK
POWER SUPPLY CIRCUIT
52
Vcc
Vdd
STEP-DOWN POWER
SUPPLY CIRCUIT
VOLTAGE DETECTION UNIT
POR
LVD
10