[fig. 10]

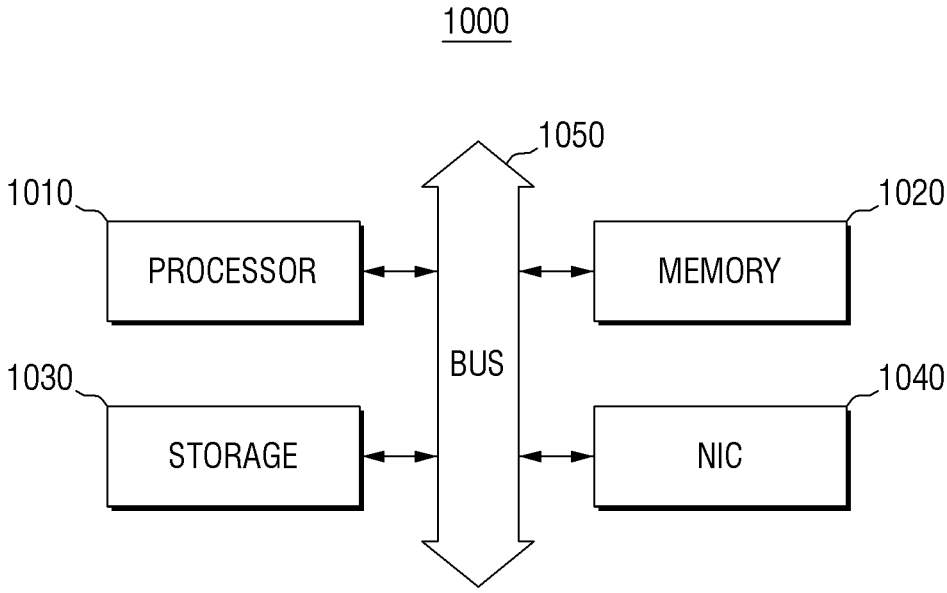
1000
1050
1010
PROCESSOR
1020
MEMORY
BUS
1030
STORAGE
1040
NIC