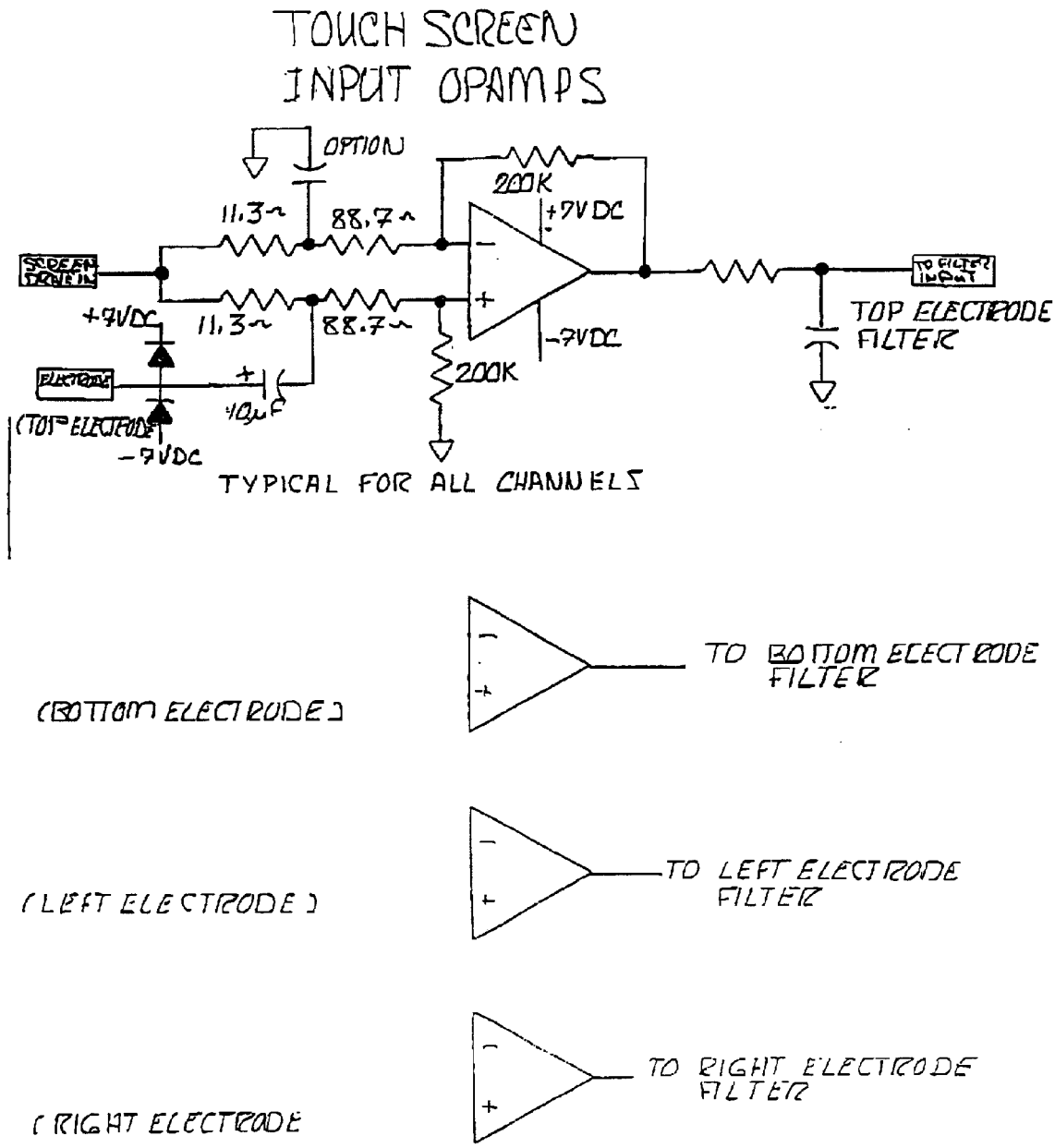
TOUCH SCREEN
INPUT OPAMPS
OPTION
200K
+7VDC
11.3Ω
88.7Ω
SCREEN DRIVE IN
TO FILTER INPUT
+7VDC
11.3Ω
88.7Ω
-7VDC
TOP ELECTRODE
FILTER
ELECTRODE
200K
40μF
(TOP ELECTRODE
-7VDC
TYPICAL FOR ALL CHANNELS
TO BOTTOM ELECTRODE
FILTER
(BOTTOM ELECTRODE)
TO LEFT ELECTRODE
FILTER
(LEFT ELECTRODE)
TO RIGHT ELECTRODE
FILTER
(RIGHT ELECTRODE

FIG. 7d