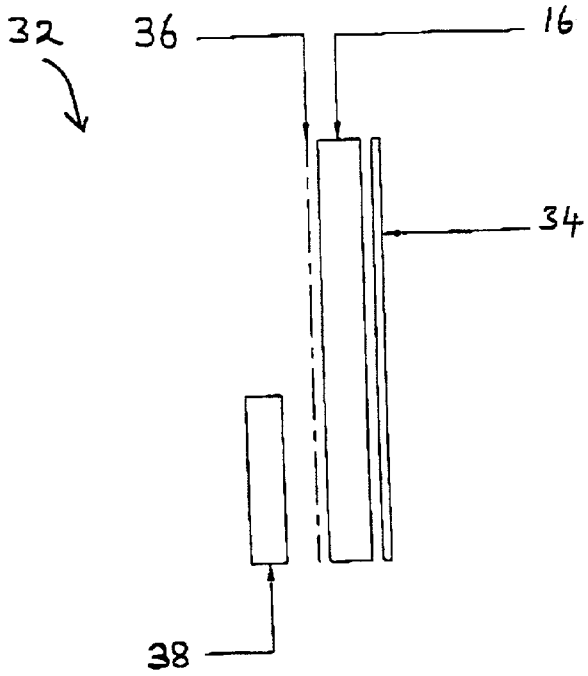
32
36
16
34
38

FIG. 3

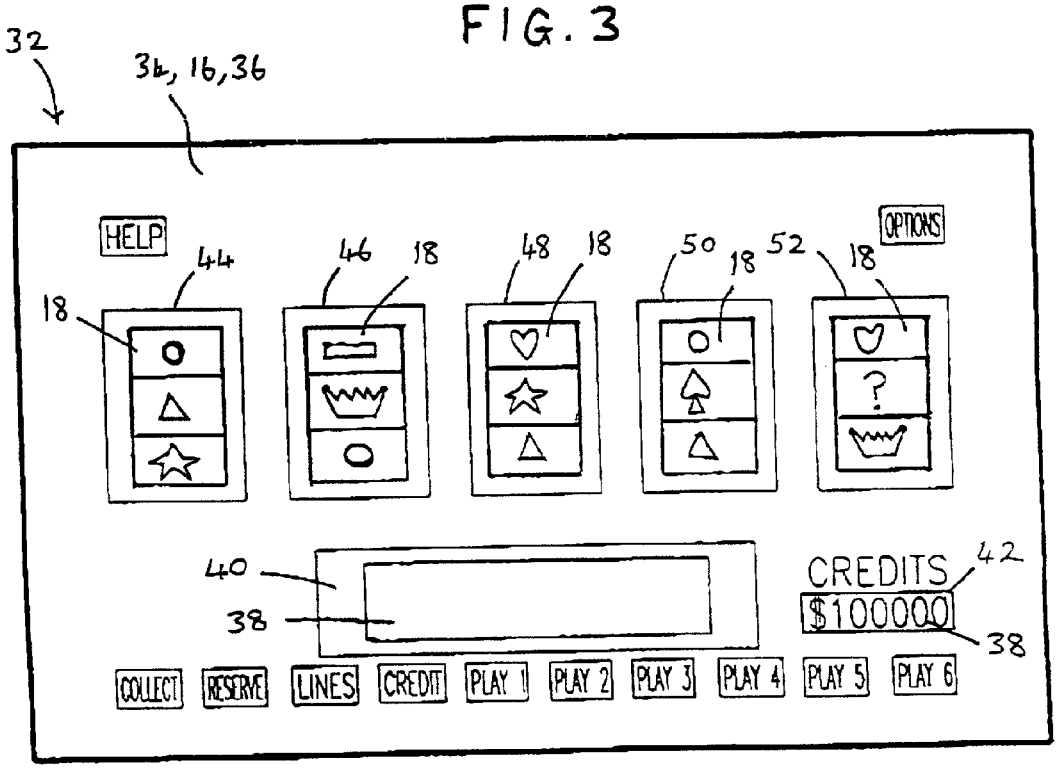
32
34, 16, 36
HELP
OPTIONS
44
46
48
50
52
18
40
38
42
CREDITS
$100000
COLLECT
RESERVE
LINES
CREDIT
PLAY 1
PLAY 2
PLAY 3
PLAY 4
PLAY 5
PLAY 6

FIG. 4