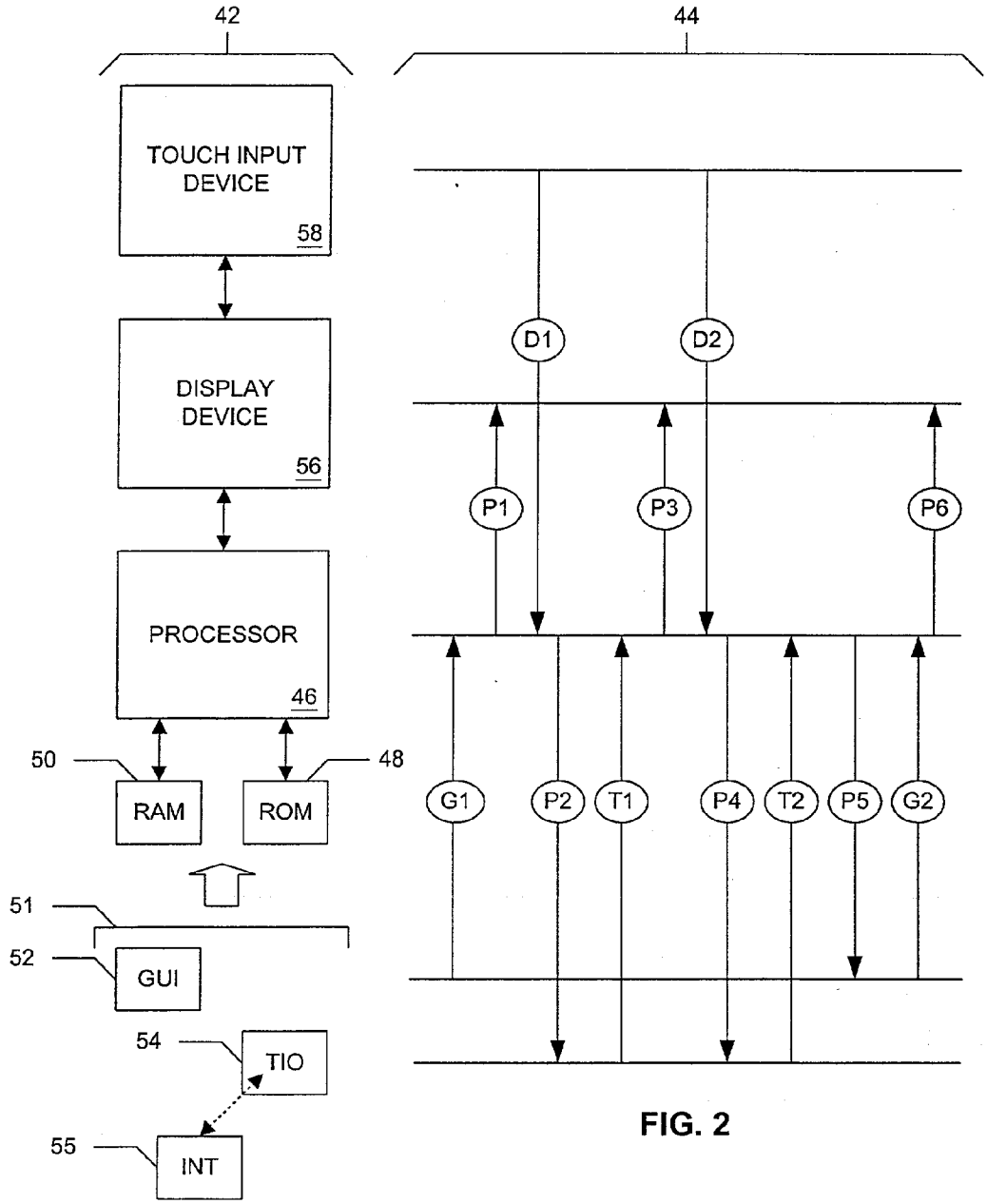
42
44
TOUCH INPUT DEVICE
58
DISPLAY DEVICE
56
PROCESSOR
46
50
48
RAM
ROM
51
52
GUI
54
TIO
55
INT
D1
D2
P1
P3
P6
G1
P2
T1
P4
T2
P5
G2

FIG. 2

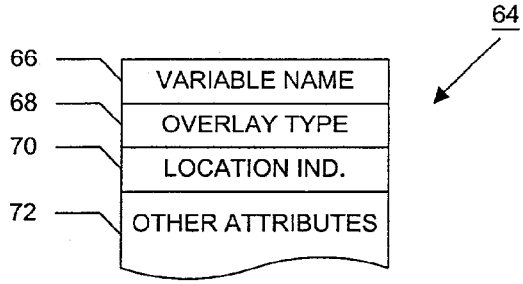
64
66
68
70
72
VARIABLE NAME
OVERLAY TYPE
LOCATION IND.
OTHER ATTRIBUTES

FIG. 3