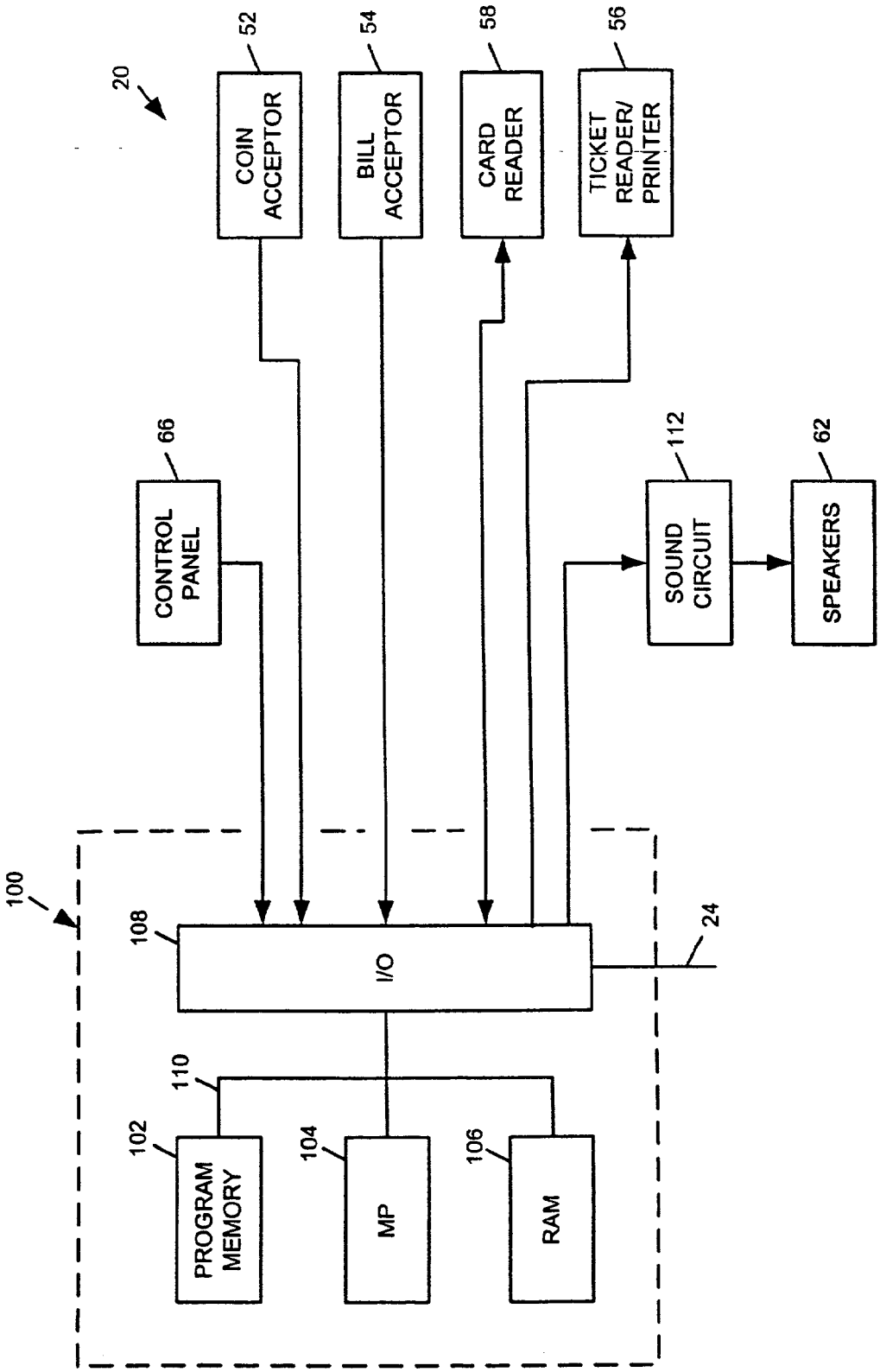
20
52
COIN ACCEPTOR
54
BILL ACCEPTOR
58
CARD READER
56
TICKET READER/ PRINTER
66
CONTROL PANEL
112
SOUND CIRCUIT
62
SPEAKERS
100
108
I/O
24
110
102
PROGRAM MEMORY
104
MP
106
RAM

FIG. 3