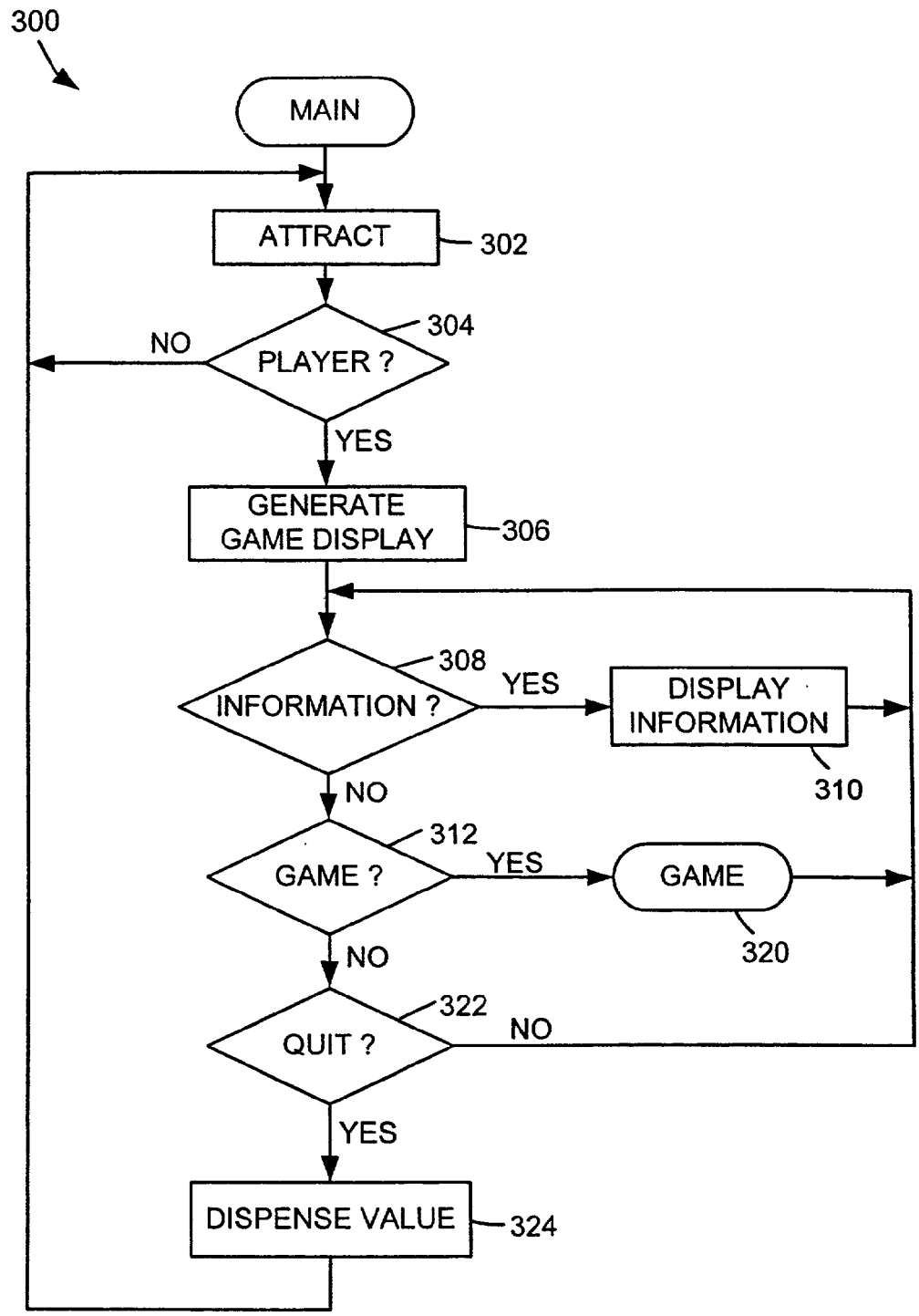
300
MAIN
ATTRACT
302
PLAYER ?
304
NO
YES
GENERATE GAME DISPLAY
306
INFORMATION ?
308
YES
DISPLAY INFORMATION
310
NO
GAME ?
312
YES
GAME
320
NO
QUIT ?
322
NO
YES
DISPENSE VALUE
324

FIG. 5