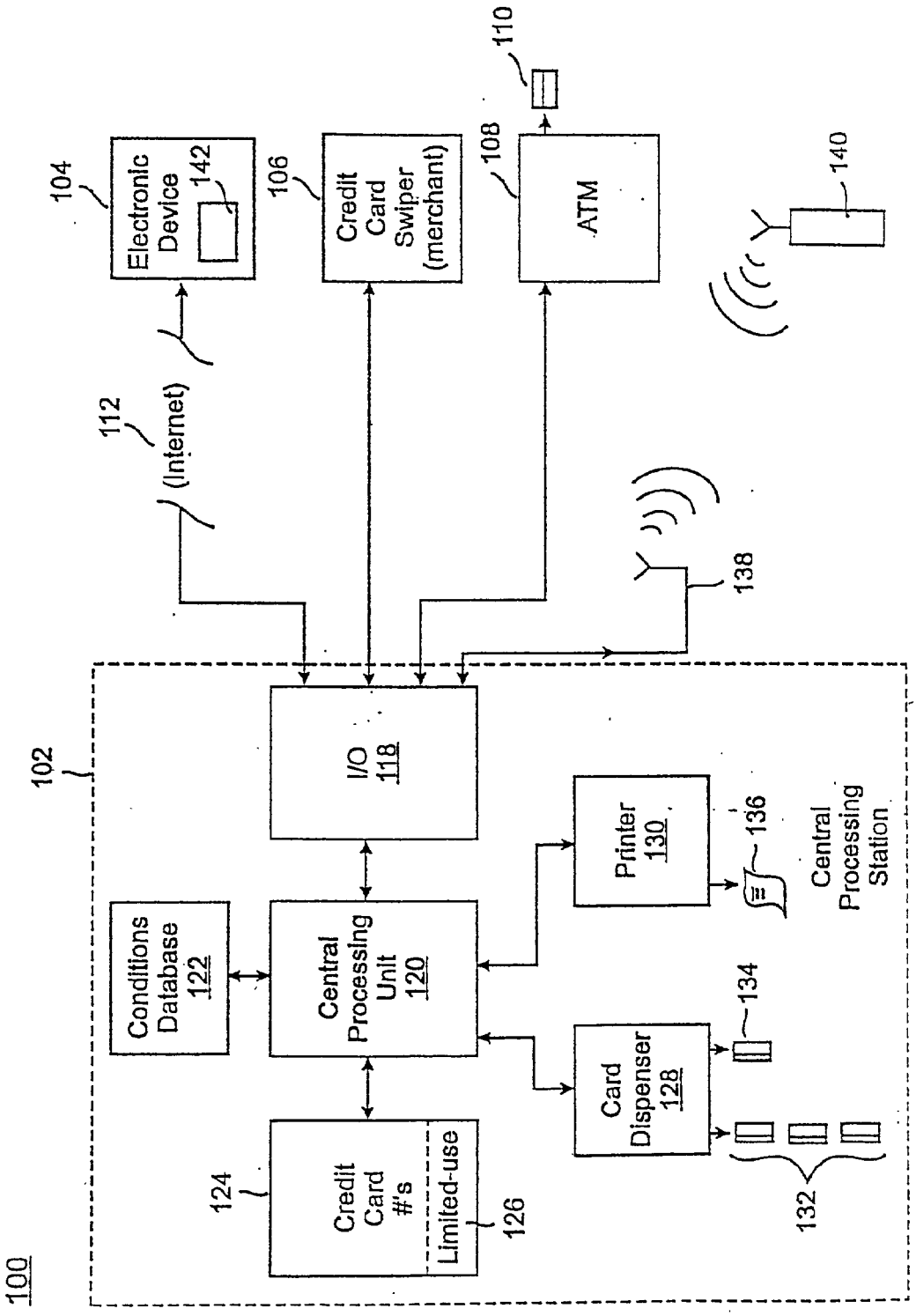
100
102
104
Electronic Device
142
106
Credit Card Swiper (merchant)
108
ATM
110
112
(Internet)
140
138
I/O 118
Conditions Database 122
Central Processing Unit 120
Printer 130
136
Central Processing Station
Card Dispenser 128
134
132
124
Credit Card #'s
Limited-use
126

Fig. 1