US 20160323081A1

(19) United States

(12) Patent Application Publication

CHMIEL et al.

(10) Pub. No.: US 2016/0323081 A1

(43) Pub. Date: Nov. 3, 2016

(54) **APPARATUS, METHODS, AND COMPUTER PROGRAM PRODUCTS PROVIDING AN INDICATION OF CYCLIC PREFIX LENGTH**

(71) Applicant: **Nokia Solutions and Network Oy**, Espoo (FI)

(72) Inventors: **Mieszko CHMIEL**, Wroclaw (PL); **Przemyslaw J. Czerepinski**, Bristol (GB); **Kaj T. Jansen**, Salo (FI)

(73) Assignee: **Nokia Solutions and Network Oy**

(21) Appl. No.: **15/207,796**

(22) Filed: **Jul. 12, 2016**

Related U.S. Application Data

(63) Continuation of application No. 12/386,743, filed on Apr. 21, 2009, now Pat. No. 9,419,836.

(60) Provisional application No. 61/125,440, filed on Apr. 25, 2008.

Publication Classification

(51) **Int. Cl.**

H04L 5/00	(2006.01)
H04J 11/00	(2006.01)
H04W 72/04	(2006.01)
H04L 27/26	(2006.01)

(52) **U.S. Cl.**

CPC ***H04L 5/0048*** (2013.01); ***H04L 27/2607*** (2013.01); ***H04J 11/0093*** (2013.01); ***H04W 72/042*** (2013.01); *H04J 2203/0089* (2013.01); *H04W 84/045* (2013.01)

(57) **ABSTRACT**
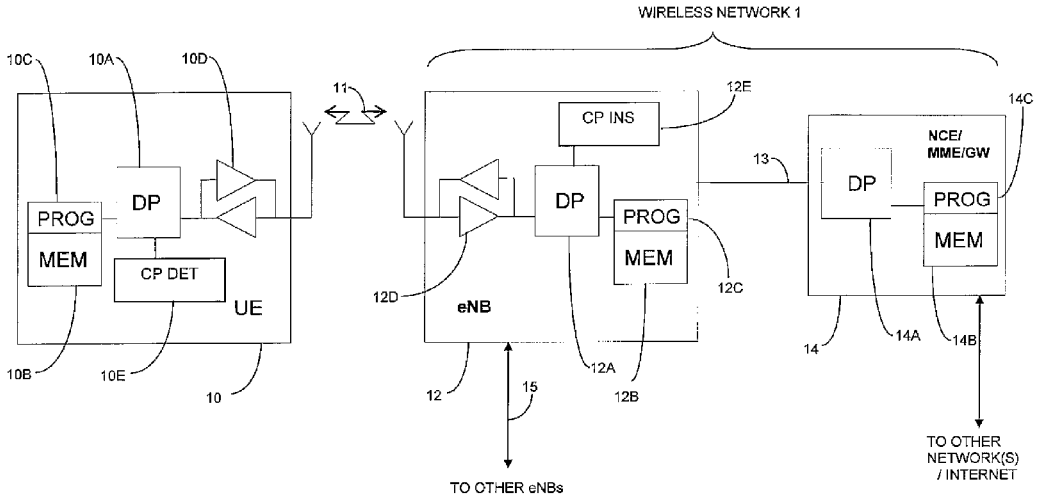
In one exemplary embodiment, a method includes: inserting an indication of a cyclic prefix length into a transmission; and sending the transmission. In another exemplary embodiment, a method includes: receiving a transmission; and processing the received transmission to obtain an indication of a cyclic prefix length.