US 20170031081A1

(19) United States

(12) Patent Application Publication

LEE et al.

(10) Pub. No.: US 2017/0031081 A1

(43) Pub. Date: Feb. 2, 2017

(54) **SHOWCASE**

(71) Applicant: **SAMSUNG ELECTRONICS CO., LTD.**, Suwon-si (KR)

(72) Inventors: **A Rum LEE**, Wonju-si (KR); **Kwan Sik MIN**, Gunpo-si (KR); **Sang Hyun SOHN**, Suwon-si (KR)

(73) Assignee: **SAMSUNG ELECTRONICS CO., LTD.**, Suwon-si (KR)

(21) Appl. No.: **15/133,304**

(22) Filed: **Apr. 20, 2016**

Related U.S. Application Data

(60) Provisional application No. 62/199,373, filed on Jul. 31, 2015.

(30) **Foreign Application Priority Data**

Aug. 26, 2015 (KR) 10-2015-0120221

Publication Classification

(51) **Int. Cl.**

F21V 8/00 (2006.01)

A47F 3/00 (2006.01)

(52) **U.S. Cl.**

CPC ***G02B 6/0036*** (2013.01); ***G02B 6/0068*** (2013.01); ***G02B 6/0061*** (2013.01); ***G02B 6/0095*** (2013.01); ***A47F 3/001*** (2013.01)

(57) **ABSTRACT**
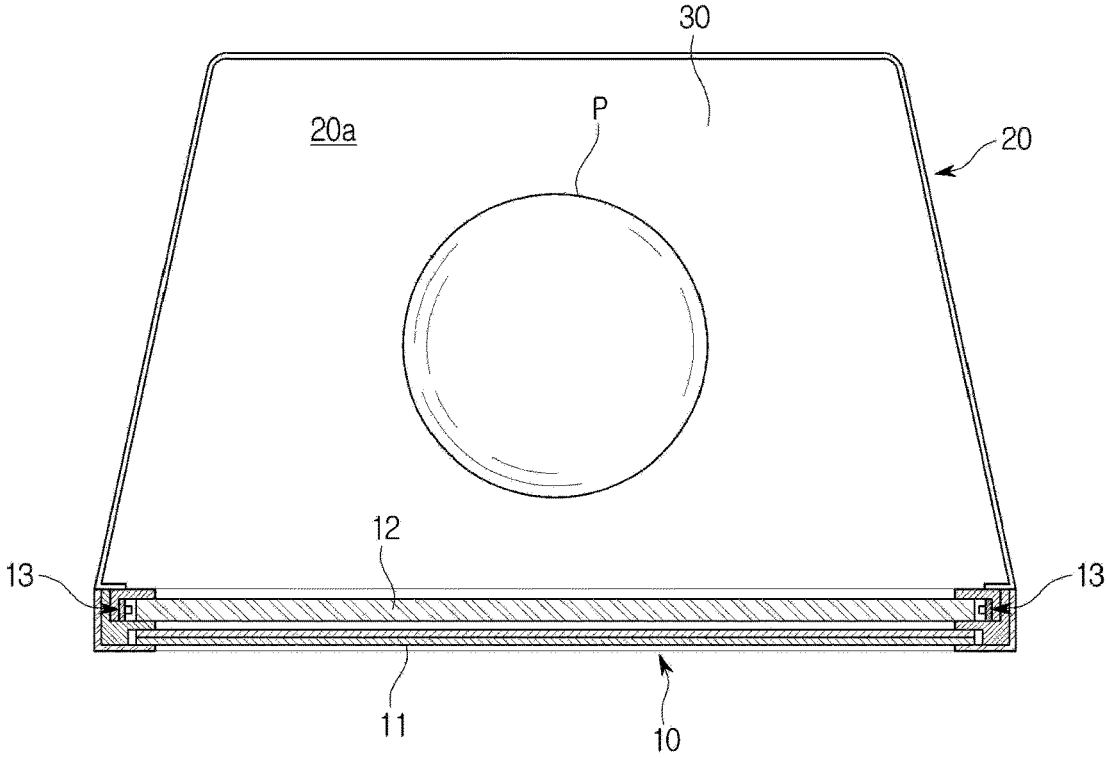
A showcase is disclosed. The show case includes a display module. By using the light source and the light guiding plate of the display module, a portion of light generated by the light source can be emitted through the rear surface of the light guiding plate to illuminate an object and then the portion of light source can be regathered into the light guiding plate again to illuminate the display module.