Fig.4A

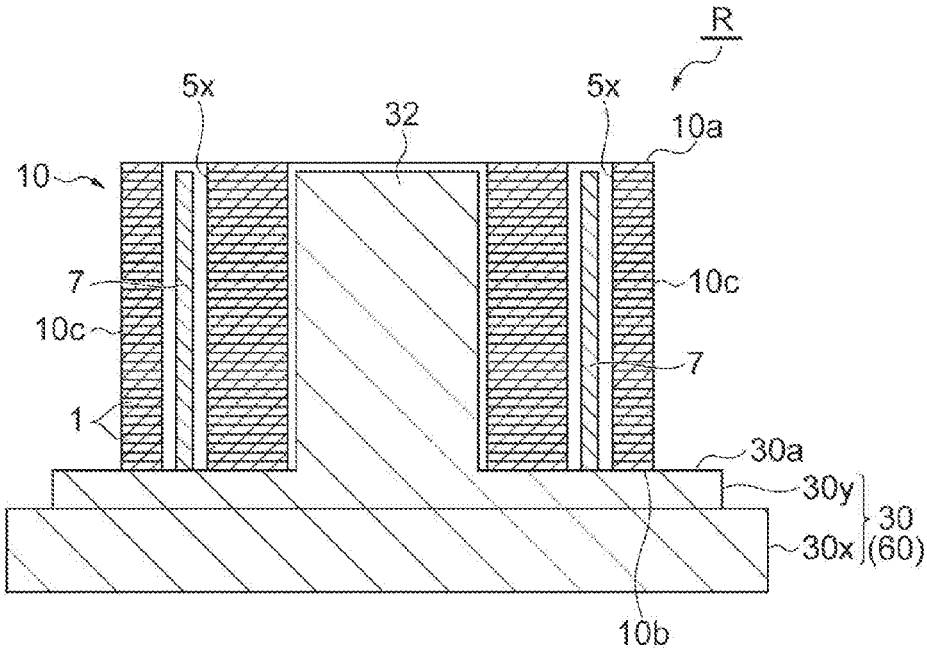
R
5x
5x
32
10a
10
7
10c
10c
7
1
30a
30y
30
30x
(60)
10b

Fig.4B

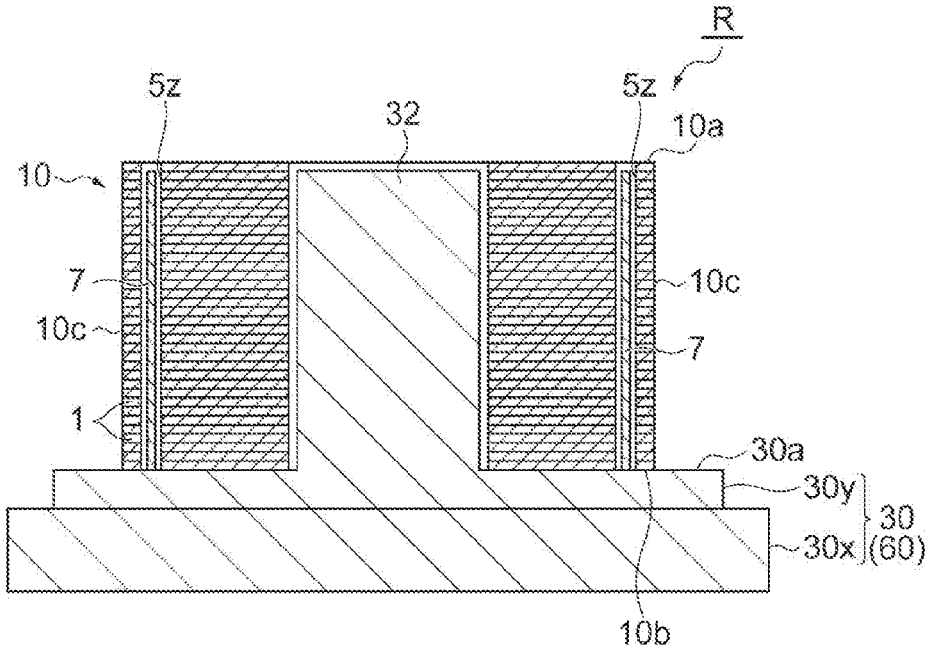
R
5z
5z
32
10a
10
7
10c
10c
7
1
30a
30y
30
30x
(60)
10b