FIG. 4

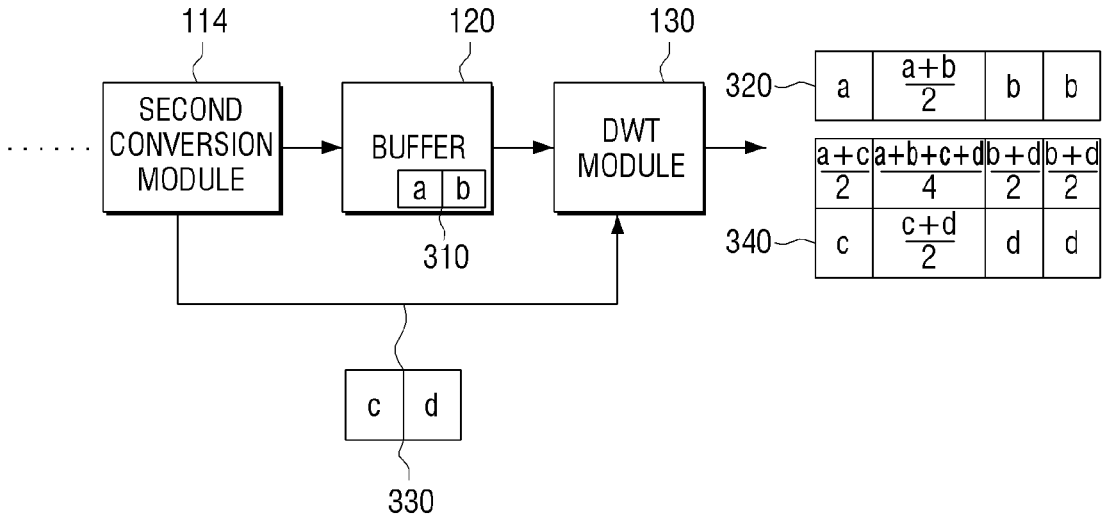
114
120
130
SECOND CONVERSION MODULE
BUFFER
a
b
310
DWT MODULE
320
a
a+b / 2
b
b
a+c / 2
a+b+c+d / 4
b+d / 2
b+d / 2
340
c
c+d / 2
d
d
c
d
330