FIG. 8

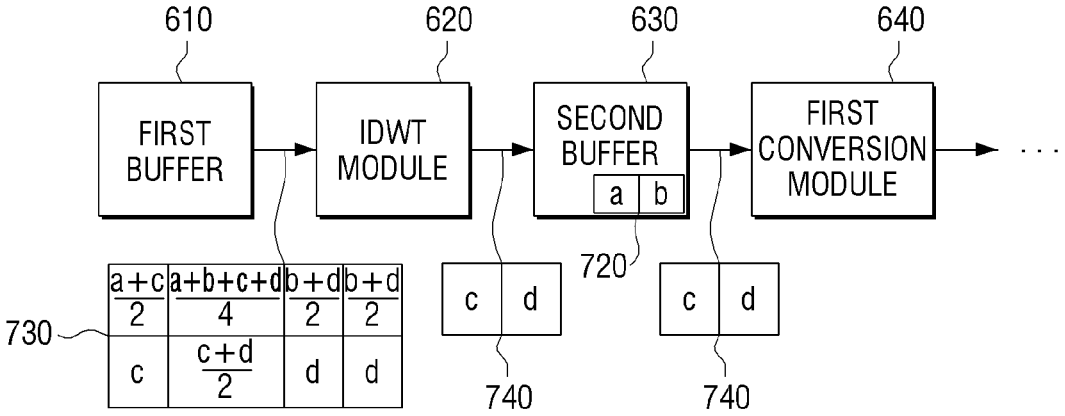
610
620
630
640
FIRST BUFFER
IDWT MODULE
SECOND BUFFER
a
b
FIRST CONVERSION MODULE
720
730
a+c / 2
a+b+c+d / 4
b+d / 2
b+d / 2
c
c+d / 2
d
d
c
d
740
c
d
740