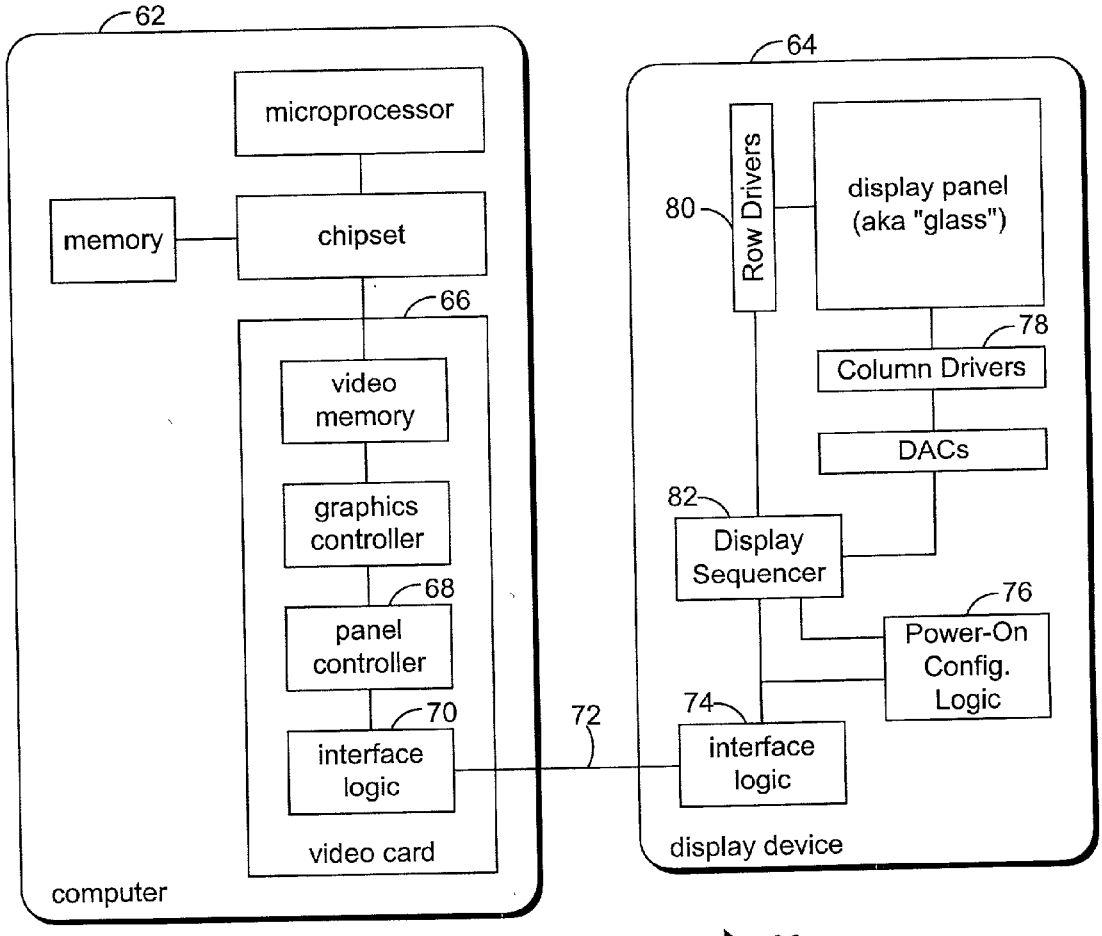
62
microprocessor
memory
chipset
66
video memory
graphics controller
68
panel controller
70
interface logic
video card
computer
72
64
80
Row Drivers
display panel (aka "glass")
78
Column Drivers
DACs
82
Display Sequencer
76
Power-On Config. Logic
74
interface logic
display device
60

Fig. 2