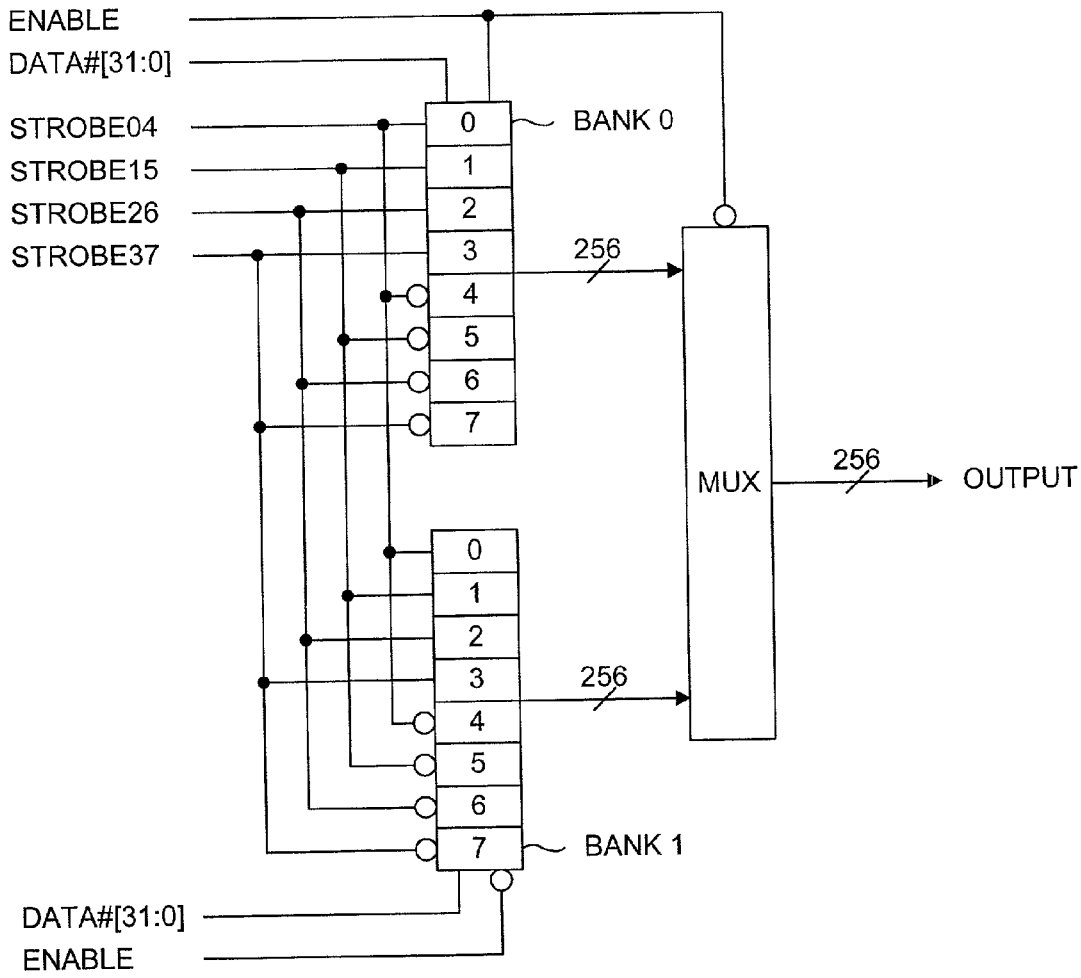
ENABLE
DATA#[31:0]
STROBE04
STROBE15
STROBE26
STROBE37
0
1
2
3
4
5
6
7
BANK 0
256
MUX
256
OUTPUT
0
1
2
3
4
5
6
7
256
BANK 1
DATA#[31:0]
ENABLE

Fig. 6