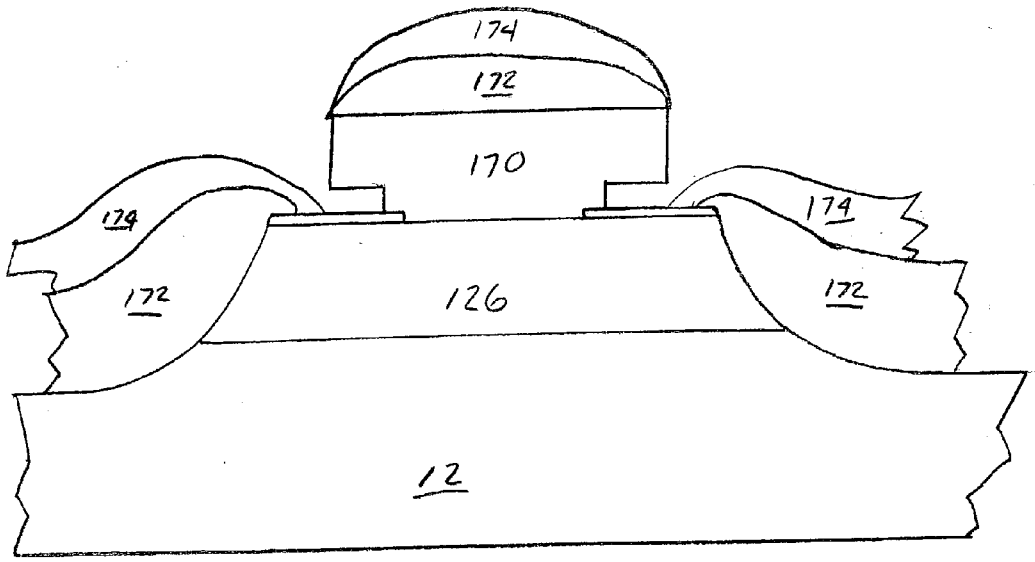

FIG 12