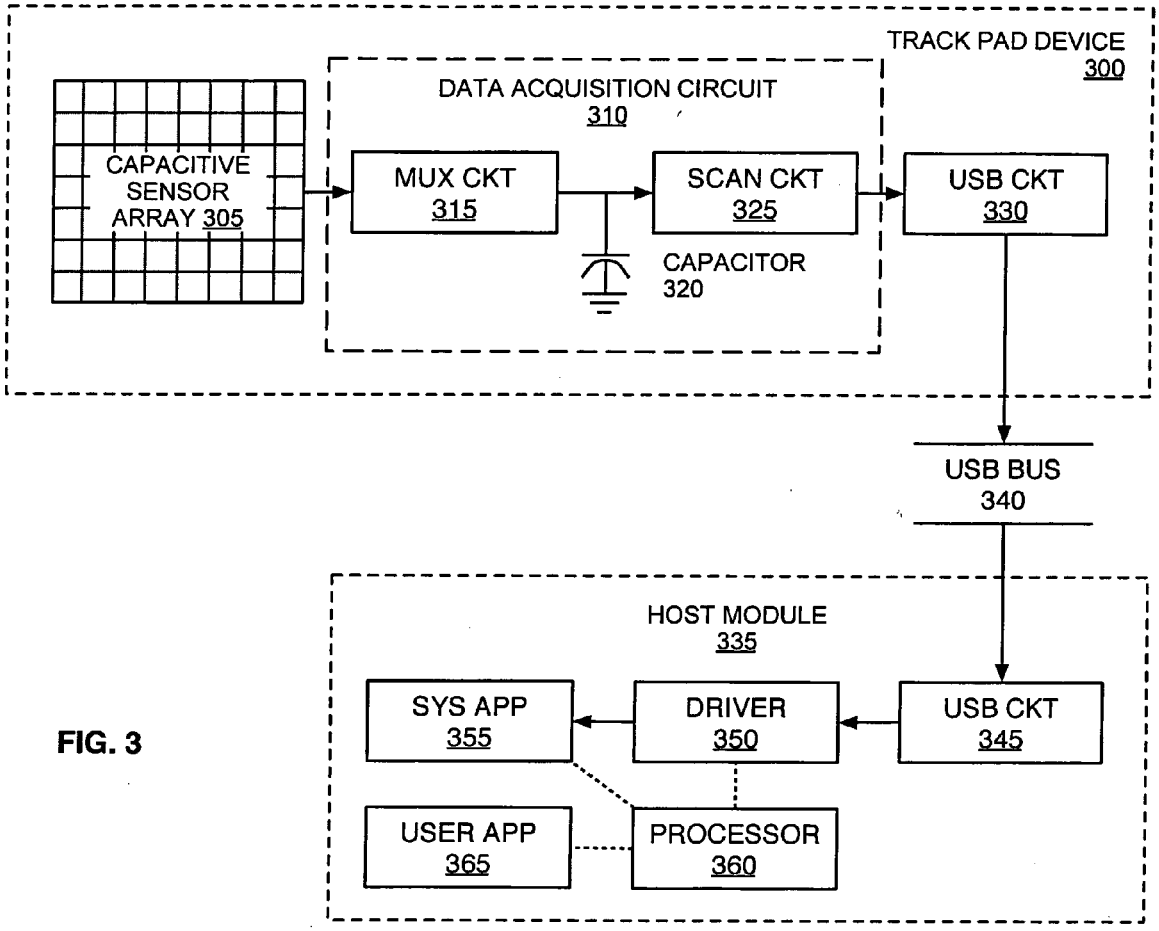
TRACK PAD DEVICE
300
DATA ACQUISITION CIRCUIT
310
CAPACITIVE SENSOR ARRAY 305
MUX CKT
315
SCAN CKT
325
USB CKT
330
CAPACITOR
320
USB BUS
340
HOST MODULE
335
SYS APP
355
DRIVER
350
USB CKT
345
USER APP
365
PROCESSOR
360

FIG. 3