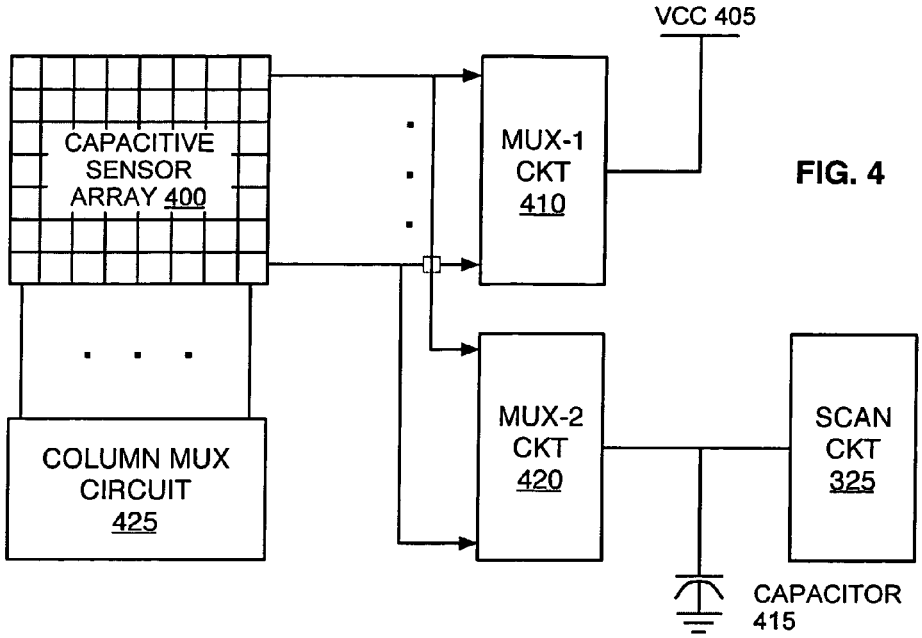
VCC 405
CAPACITIVE SENSOR ARRAY 400
MUX-1 CKT 410
MUX-2 CKT 420
SCAN CKT 325
COLUMN MUX CIRCUIT 425
CAPACITOR 415

FIG. 4

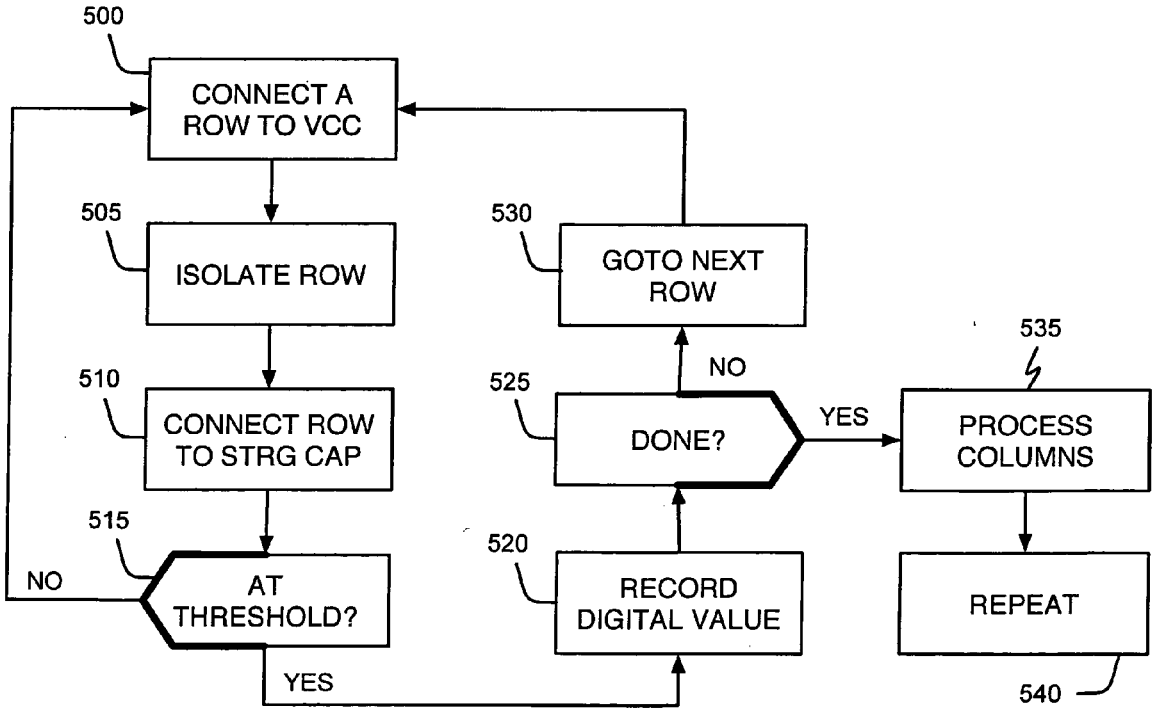
500
CONNECT A ROW TO VCC
505
ISOLATE ROW
510
CONNECT ROW TO STRG CAP
515
AT THRESHOLD?
NO
YES
520
RECORD DIGITAL VALUE
525
DONE?
NO
YES
530
GOTO NEXT ROW
535
PROCESS COLUMNS
REPEAT
540

FIG. 5