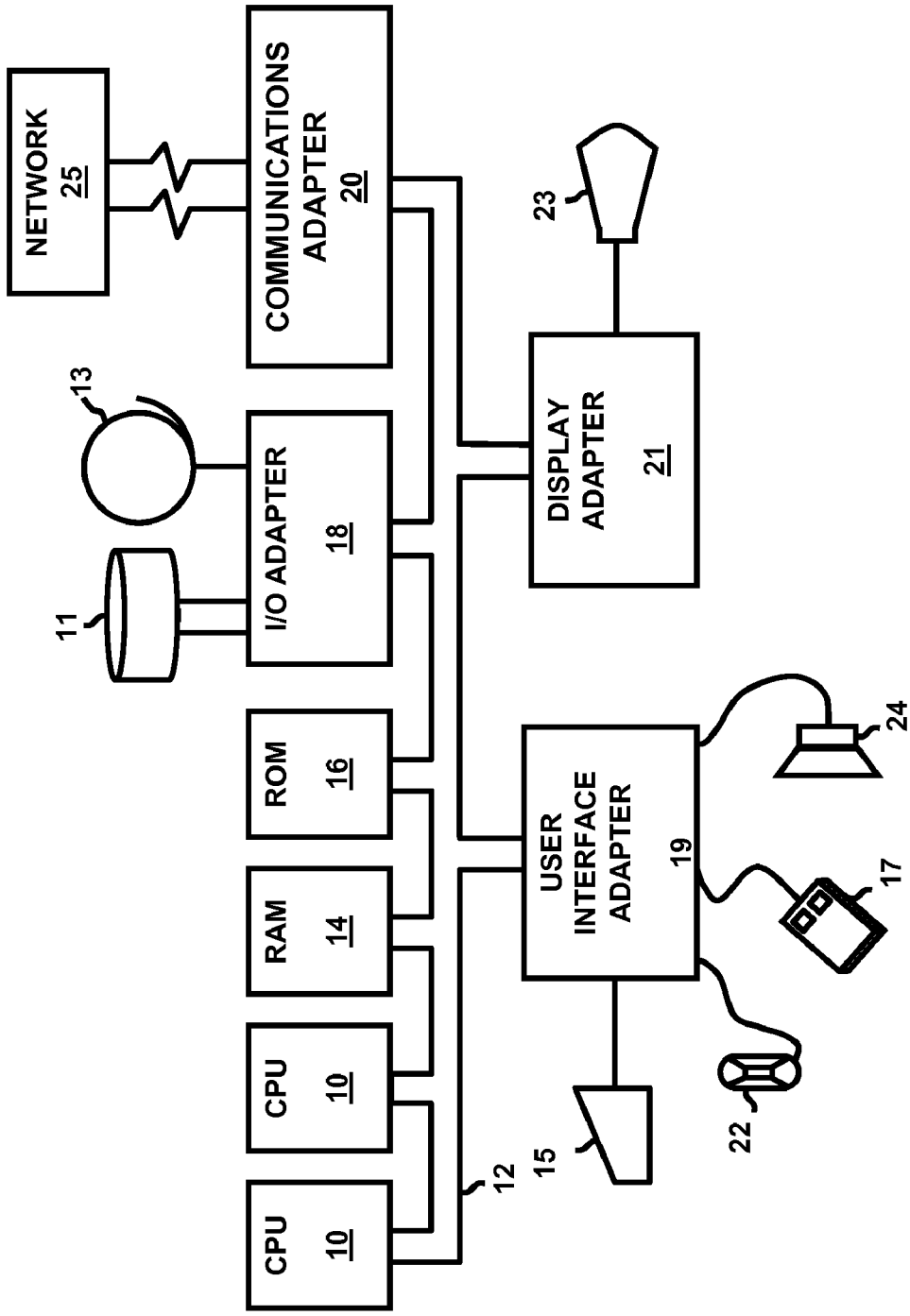
NETWORK
25
COMMUNICATIONS
ADAPTER
20
13
I/O ADAPTER
18
11
ROM
16
RAM
14
CPU
10
CPU
10
12
23
DISPLAY
ADAPTER
21
USER
INTERFACE
ADAPTER
19
24
17
22
15

FIG. 28