US 20140313982A1

(19) United States

(12) Patent Application Publication

(10) Pub. No.: US 2014/0313982 A1

(43) Pub. Date: Oct. 23, 2014

Schwarzbauer et al.

(54) METHOD OF MANAGEMENT IN A COMMUNICATIONS NETWORK

(71) Applicant: **Nokia Solutions and Netwroks Oy**, Espoo (FI)

(72) Inventors: **Hanns Juergen Schwarzbauer**, Grobenzell (DE); **Alexander Vesely**, Feldbach (AT); **Richard Waldhauser**, Munich (DE); **Johanna Katariina Pekonen**, Espoo (FI); **Srinivasan Selvaganapathy**, Bangalore (IN)

(73) Assignee: **Nokia Solutions and Networks Oy**, Espoo (FI)

(21) Appl. No.: **14/358,855**

(22) PCT Filed: **Oct. 18, 2012**

(86) PCT No.: **PCT/EP2012/070629**

§ 371 (c)(1), (2), (4) Date: **May 16, 2014**

(30) **Foreign Application Priority Data**

Nov. 4, 2011 (IN) 3786/CHE/2011

Publication Classification

(51) **Int. Cl.**
H04W 8/26 (2006.01)

(52) **U.S. Cl.**
CPC ***H04W 8/26*** (2013.01); *H04W 36/0055* (2013.01)
USPC **370/328**

(57) **ABSTRACT**
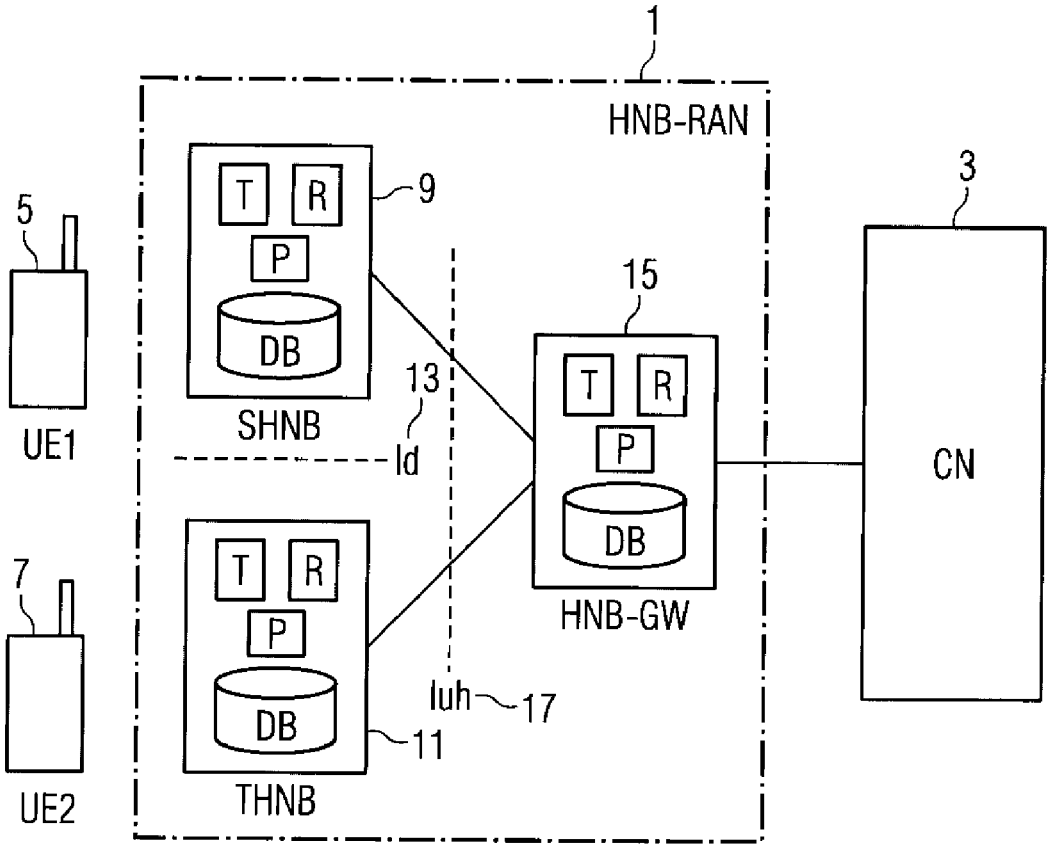
A method including maintaining a database of unique radio network identifiers within a home node B gateway, wherein the unique radio network identifier uniquely identifies the radio network termination point of user equipment attached to a radio node controlled by the home node B gateway.