FIG.13

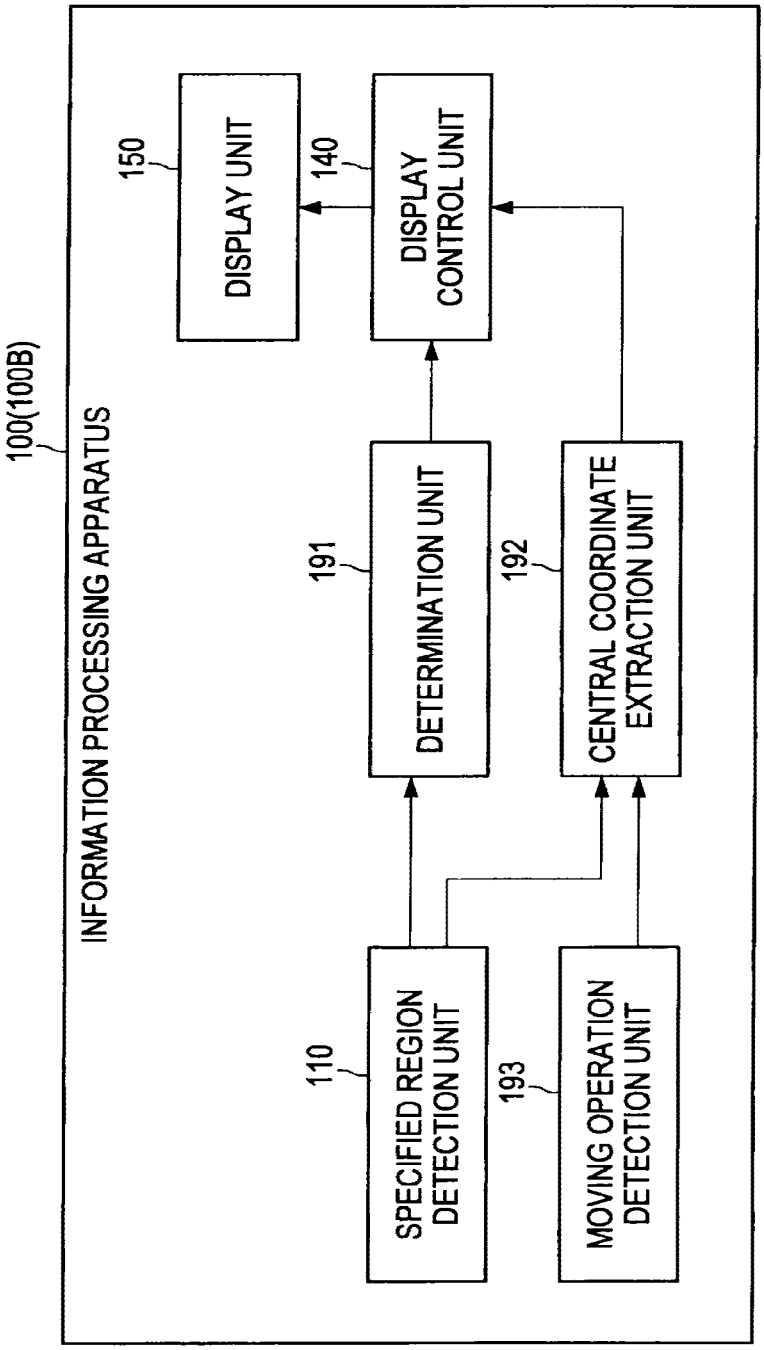
100(100B)
INFORMATION PROCESSING APPARATUS
150
DISPLAY UNIT
140
DISPLAY CONTROL UNIT
191
DETERMINATION UNIT
192
CENTRAL COORDINATE EXTRACTION UNIT
110
SPECIFIED REGION DETECTION UNIT
193
MOVING OPERATION DETECTION UNIT