FIG.3

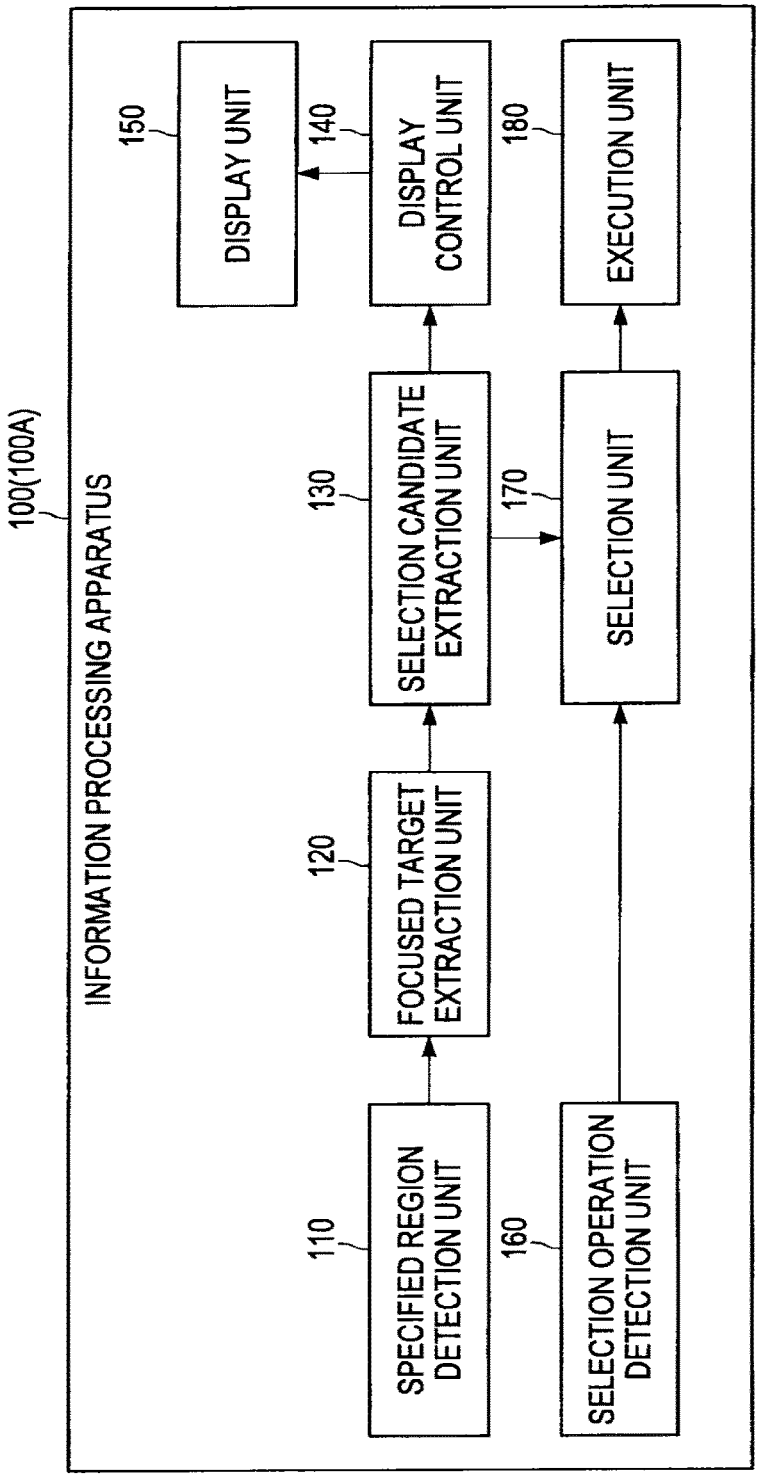
100(100A)
INFORMATION PROCESSING APPARATUS
110
SPECIFIED REGION DETECTION UNIT
120
FOCUSED TARGET EXTRACTION UNIT
130
SELECTION CANDIDATE EXTRACTION UNIT
140
DISPLAY CONTROL UNIT
150
DISPLAY UNIT
160
SELECTION OPERATION DETECTION UNIT
170
SELECTION UNIT
180
EXECUTION UNIT