FIG. 4

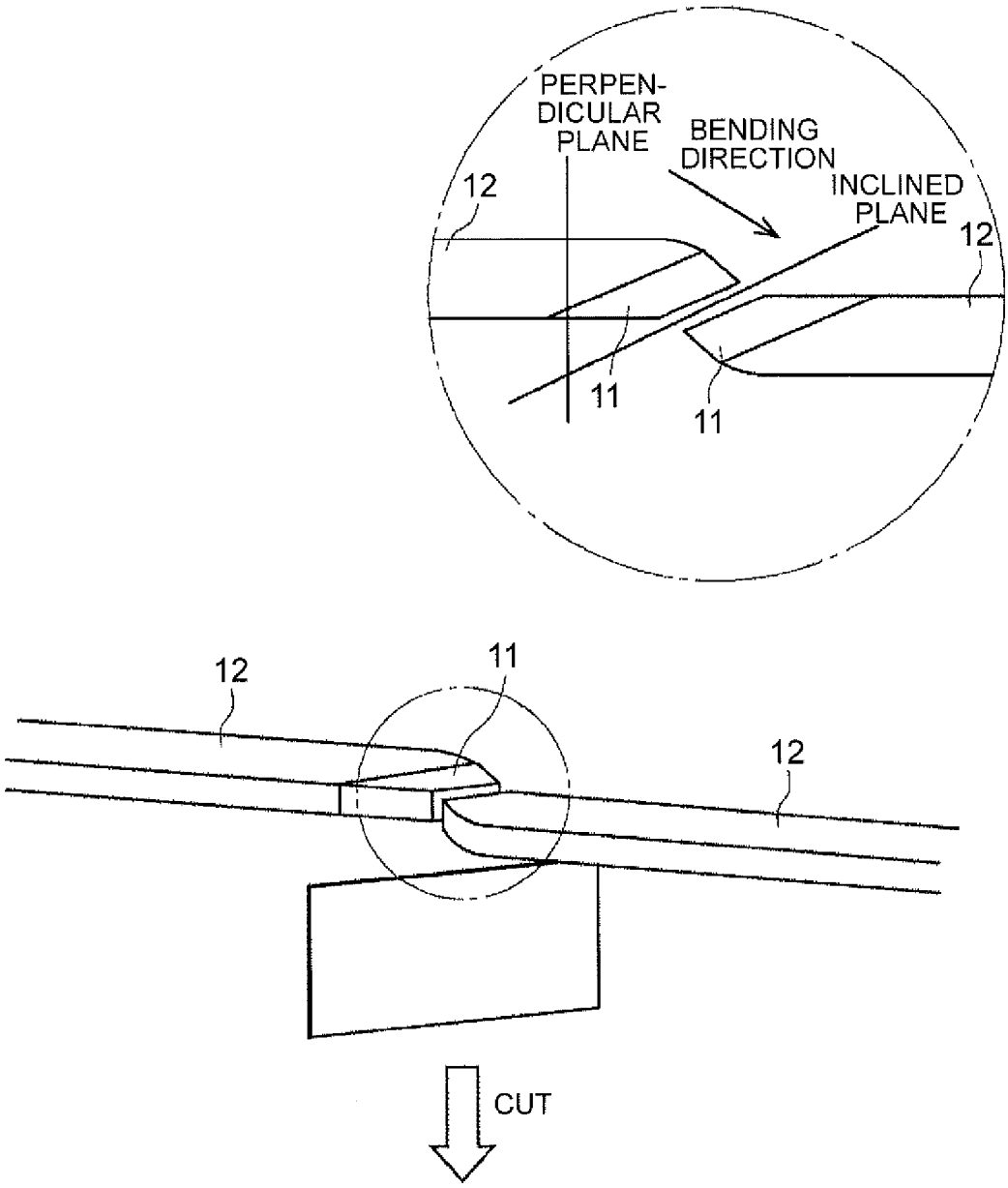
PERPEN-
DICULAR
PLANE
BENDING
DIRECTION
INCLINED
PLANE
12
12
11
11
12
11
12
CUT