US 20020084983A1

(19) United States

(12) Patent Application Publication

(10) Pub. No.: US 2002/0084983 A1

(43) Pub. Date: Jul. 4, 2002

Boldy

(54) CURSOR CONTROL DEVICE

(75) Inventor: **Manfred Boldy**, Horb a.N. (DE)

Correspondence Address:
International Business Machines Corporation
Personal and Printing Systems Group
Dept. 9CCA/Bldg. 002-2
P.O. Box 12195
Research Triangle Park, NC 27709 (US)

(73) Assignee: **International Business Machines Corporation**, Armonk, NY (US)

(21) Appl. No.: **09/998,280**

(22) Filed: **Nov. 30, 2001**

(30) **Foreign Application Priority Data**

Dec. 1, 2000 (DE) 00126327.6

Publication Classification

(51) **Int. Cl.**[7] **G09G 5/08**

(52) **U.S. Cl.** **345/157**

(57) **ABSTRACT**
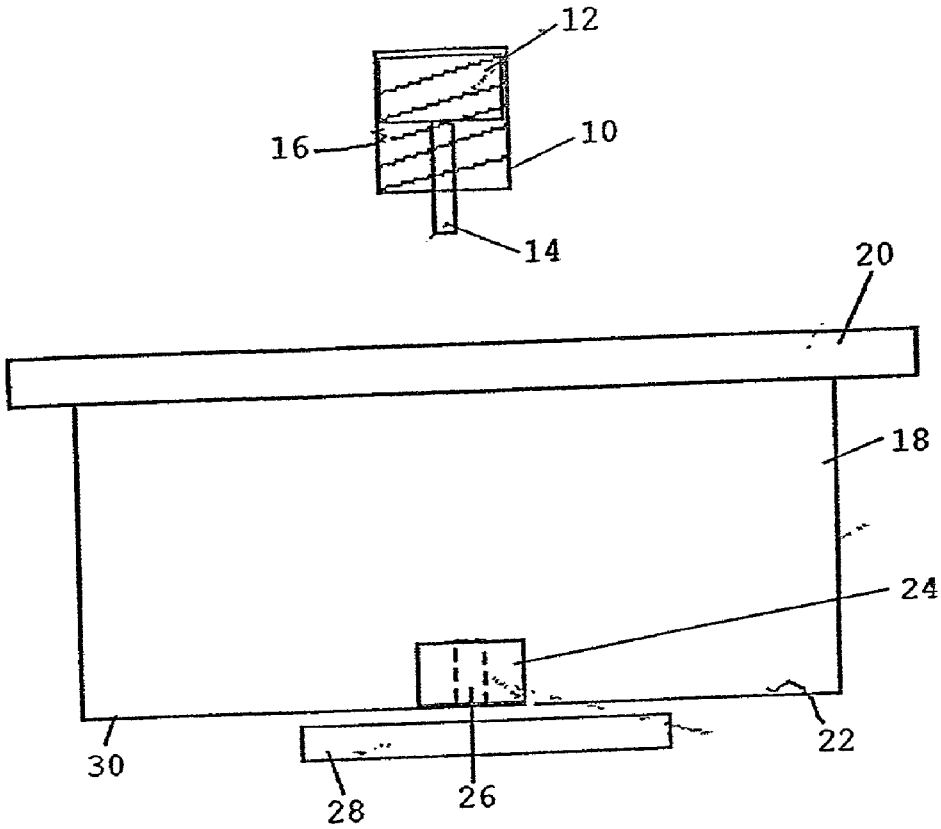
A cursor control device, such as a trackball, controls the movement of a cursor on a computer display. An electromagnetically generated braking effect is applied to the trackball, which effect varies with the speed of the cursor to allow precise control of the cursor.