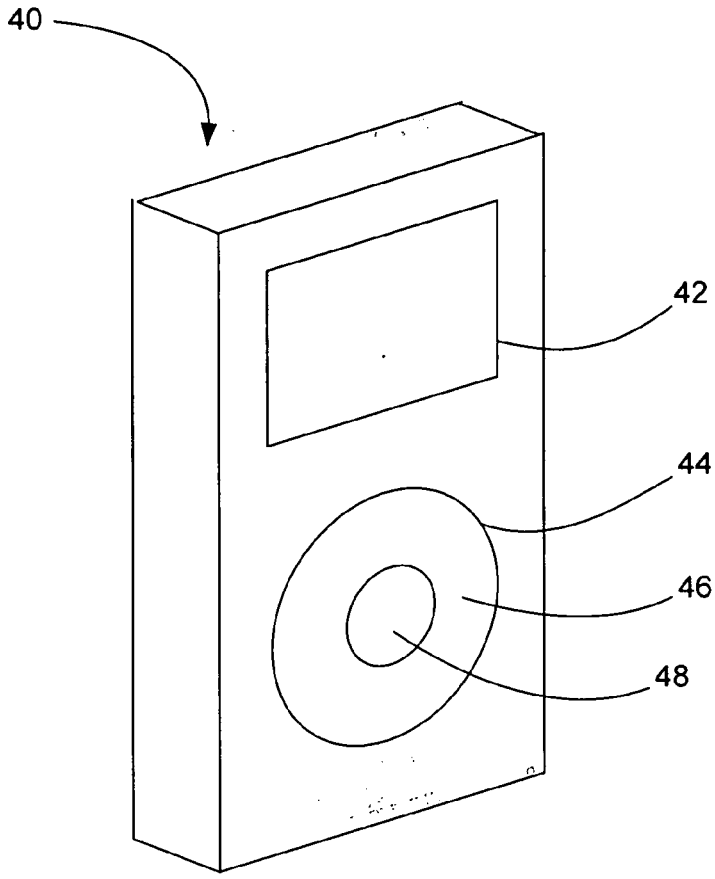
40
42
44
46
48

FIG. 4

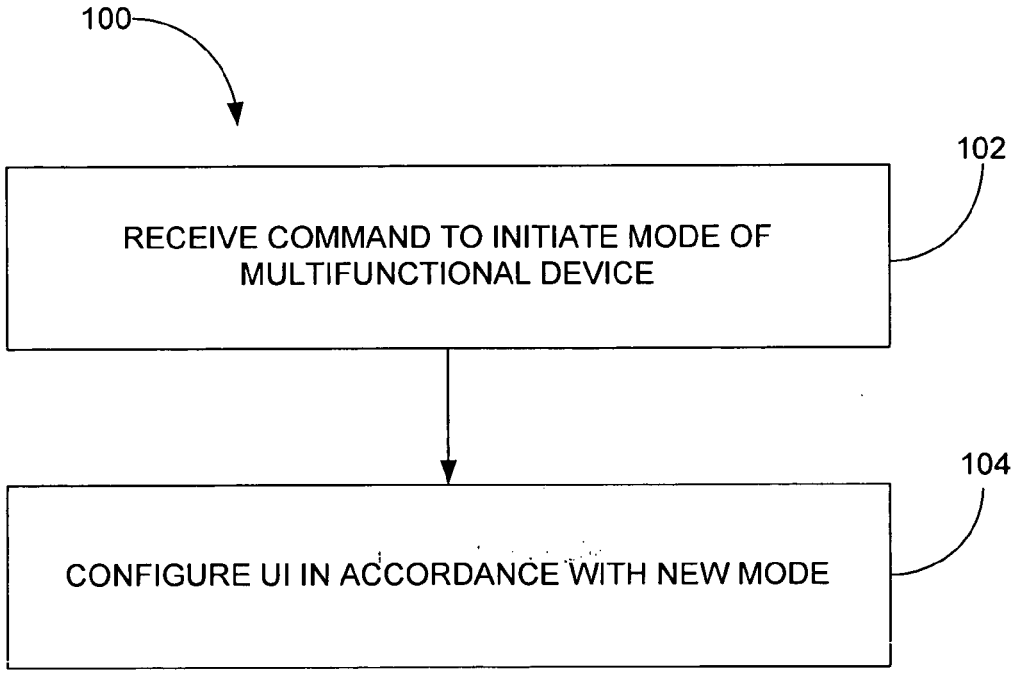
100
102
RECEIVE COMMAND TO INITIATE MODE OF MULTIFUNCTIONAL DEVICE
104
CONFIGURE UI IN ACCORDANCE WITH NEW MODE

FIG. 5