US 20090061983A1

(19) United States

(12) Patent Application Publication

Kaufman

(10) Pub. No.: US 2009/0061983 A1

(43) Pub. Date: Mar. 5, 2009

(54) THREE-DIMENSIONAL GAMES OF CHANCE HAVING MULTIPLE REEL STOPS

(75) Inventor: **Asher A. Kaufman**, Las Vegas, NV (US)

Correspondence Address:
Weaver Austin Villeneuve & Sampson LLP - IGT
Attn: IGT
P.O. Box 70250
Oakland, CA 94612-0250 (US)

(73) Assignee: **IGT**, Reno, NV (US)

(21) Appl. No.: **11/847,280**

(22) Filed: **Aug. 29, 2007**

Publication Classification

(51) **Int. Cl.**
A63F 13/08 (2006.01)

(52) **U.S. Cl.** **463/20**; 463/30; 463/32; 463/43

(57) **ABSTRACT**
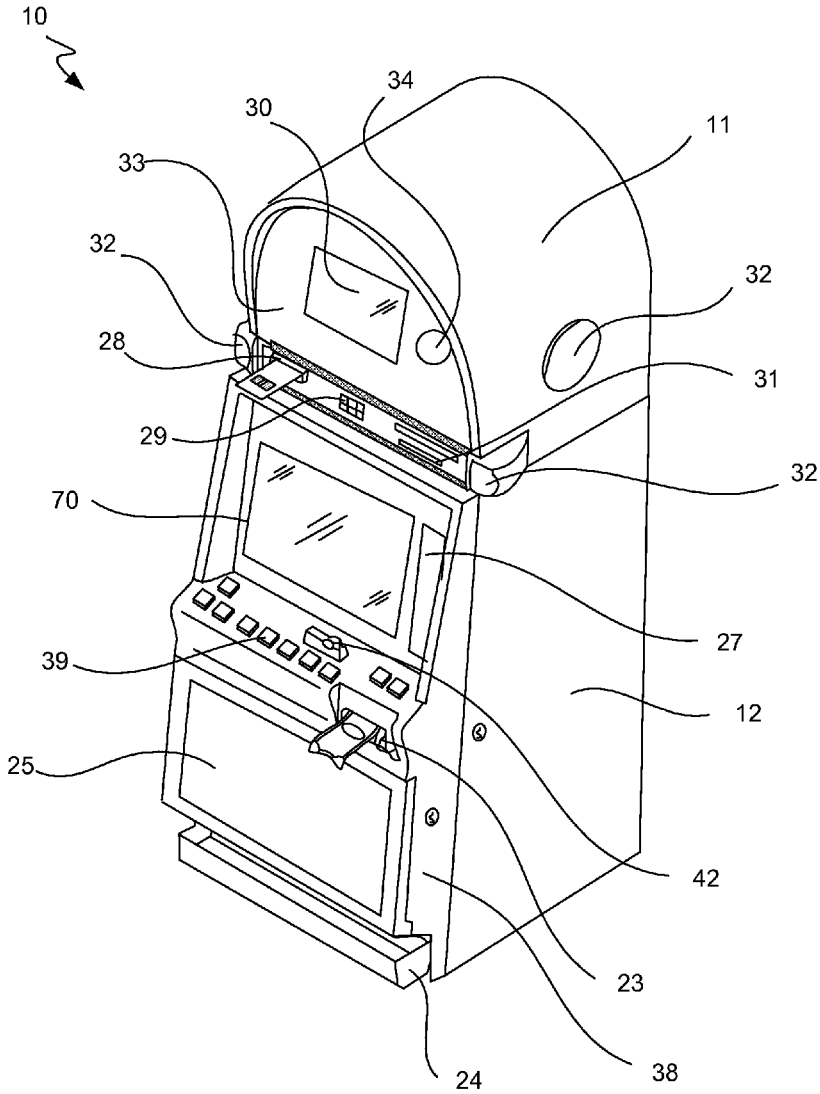
A gaming machine may have at least one display device capable of displaying 3-D images of a game of chance, and at least one processor to execute instructions to display the 3-D images on the display device, the at least one processor having display video data to display the 3-D images for: at least one first object having a first reel stop associated with a first payout value, the at least one first object moving about a central axis, each of the at least one first object having an individual center point, and at least one second object having a second reel stop, the at least one second object moving about the individual center point, the second reel stop associated with a second payout value, wherein the first payout value and the second payout value determine a total payout associated with an outcome of the game of chance.