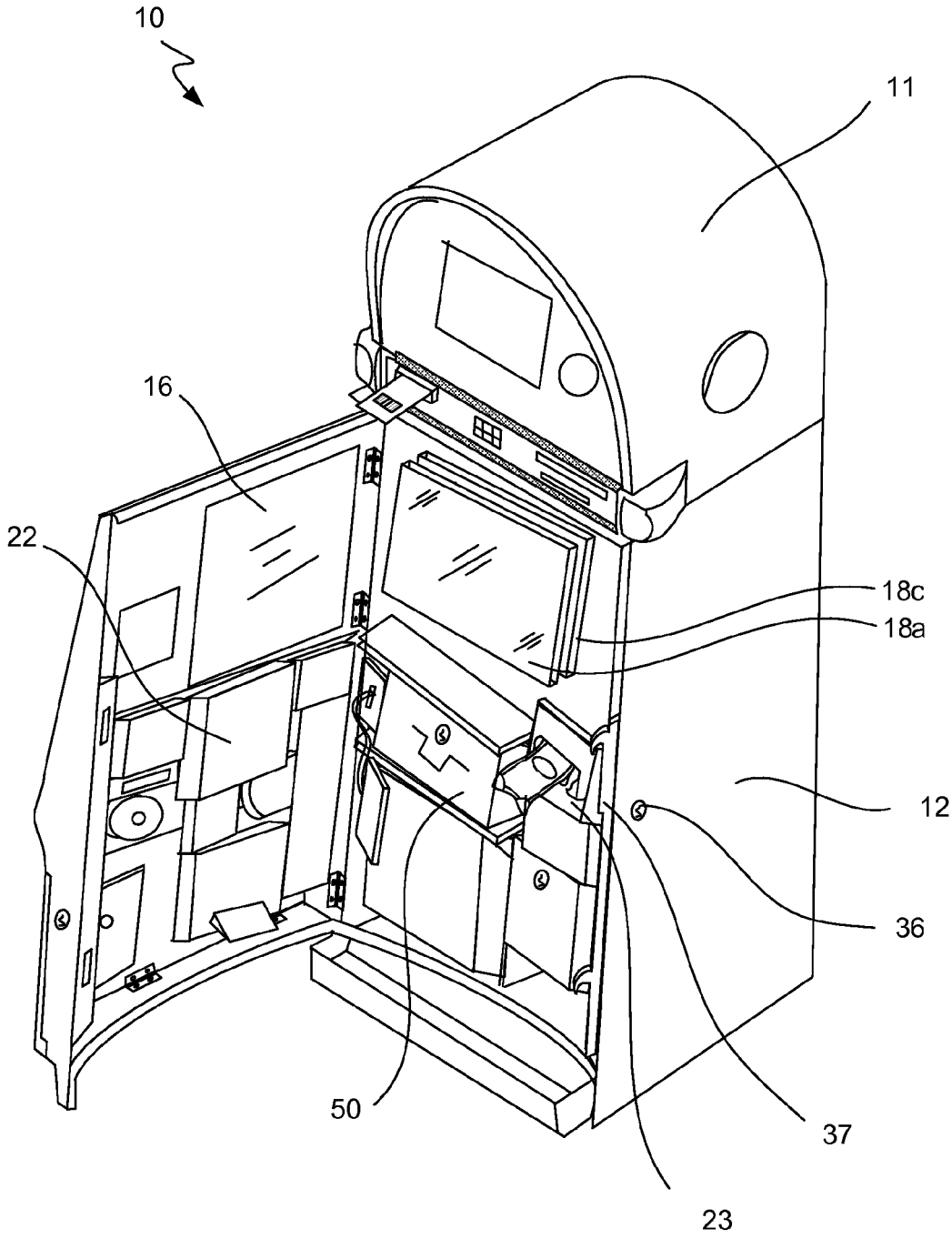

Figure 6B