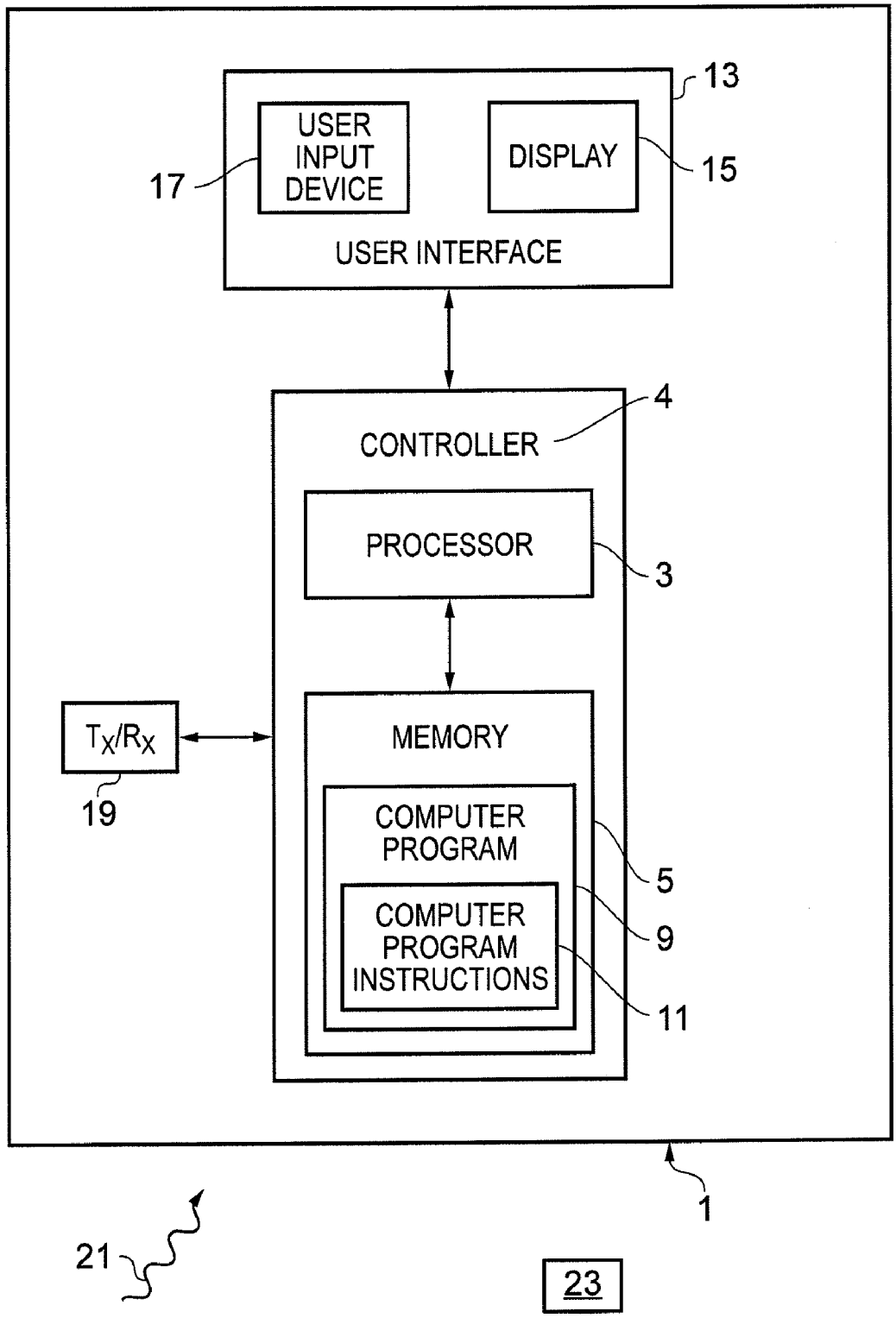
13
USER INPUT DEVICE
DISPLAY
17
15
USER INTERFACE
4
CONTROLLER
PROCESSOR
3
MEMORY
Tx/Rx
19
COMPUTER PROGRAM
5
COMPUTER PROGRAM INSTRUCTIONS
9
11
1
21
23

FIG. 1