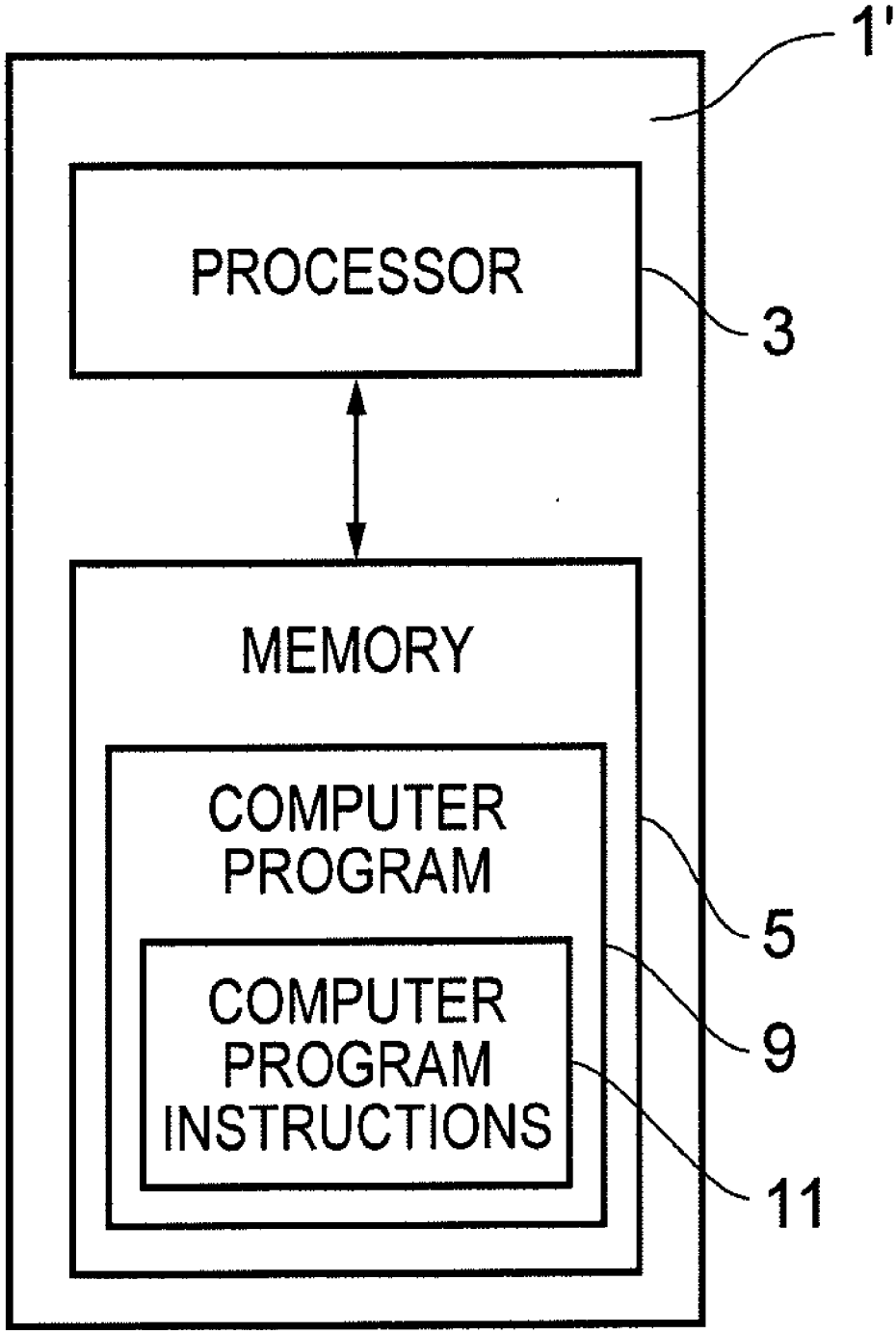
1'
PROCESSOR
3
MEMORY
COMPUTER PROGRAM
5
COMPUTER PROGRAM INSTRUCTIONS
9
11

FIG. 2