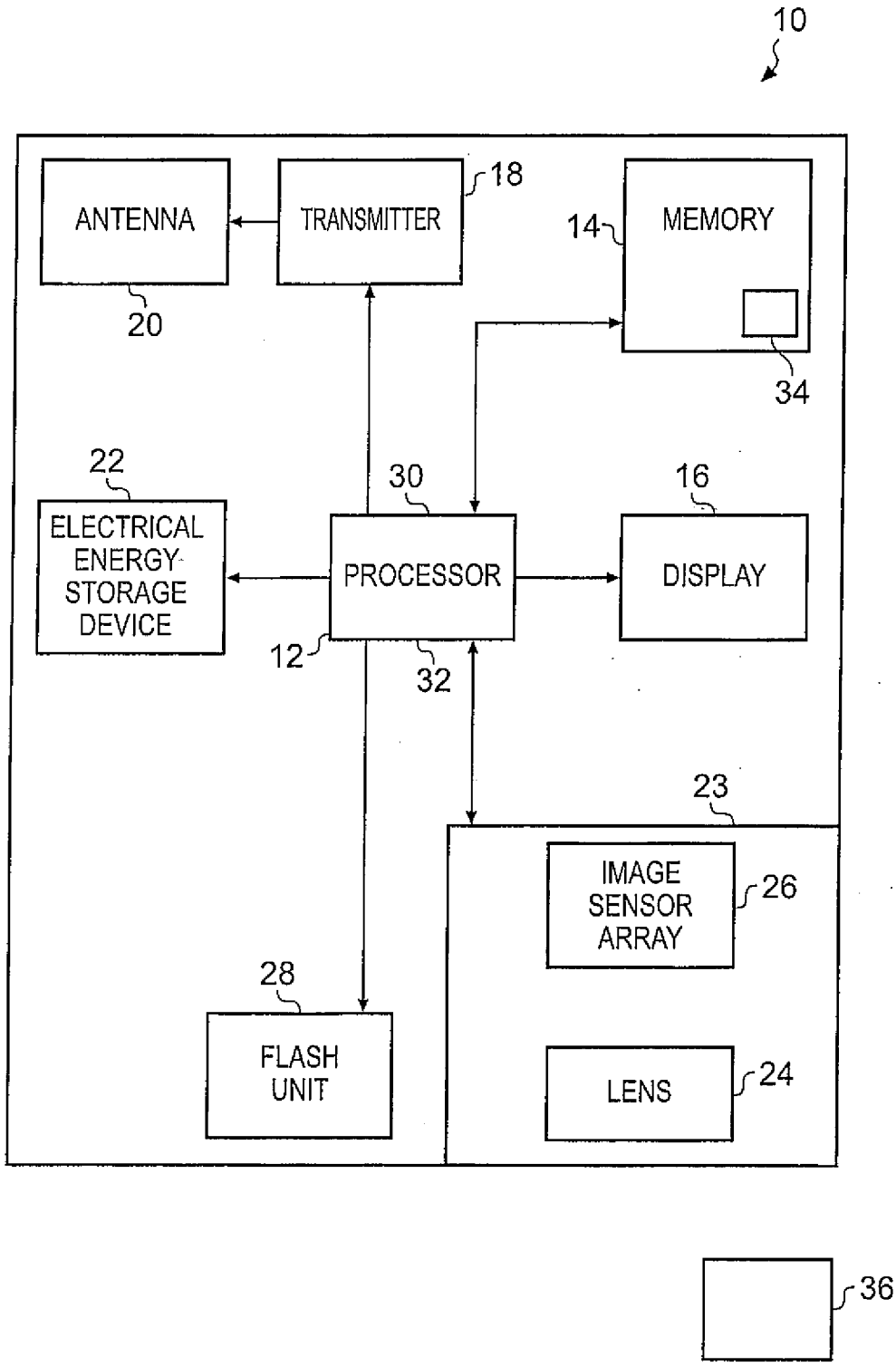
10
ANTENNA
TRANSMITTER
18
14
MEMORY
20
34
22
30
16
ELECTRICAL ENERGY STORAGE DEVICE
PROCESSOR
DISPLAY
12
32
23
IMAGE SENSOR ARRAY
26
28
FLASH UNIT
LENS
24
36

FIG. 1