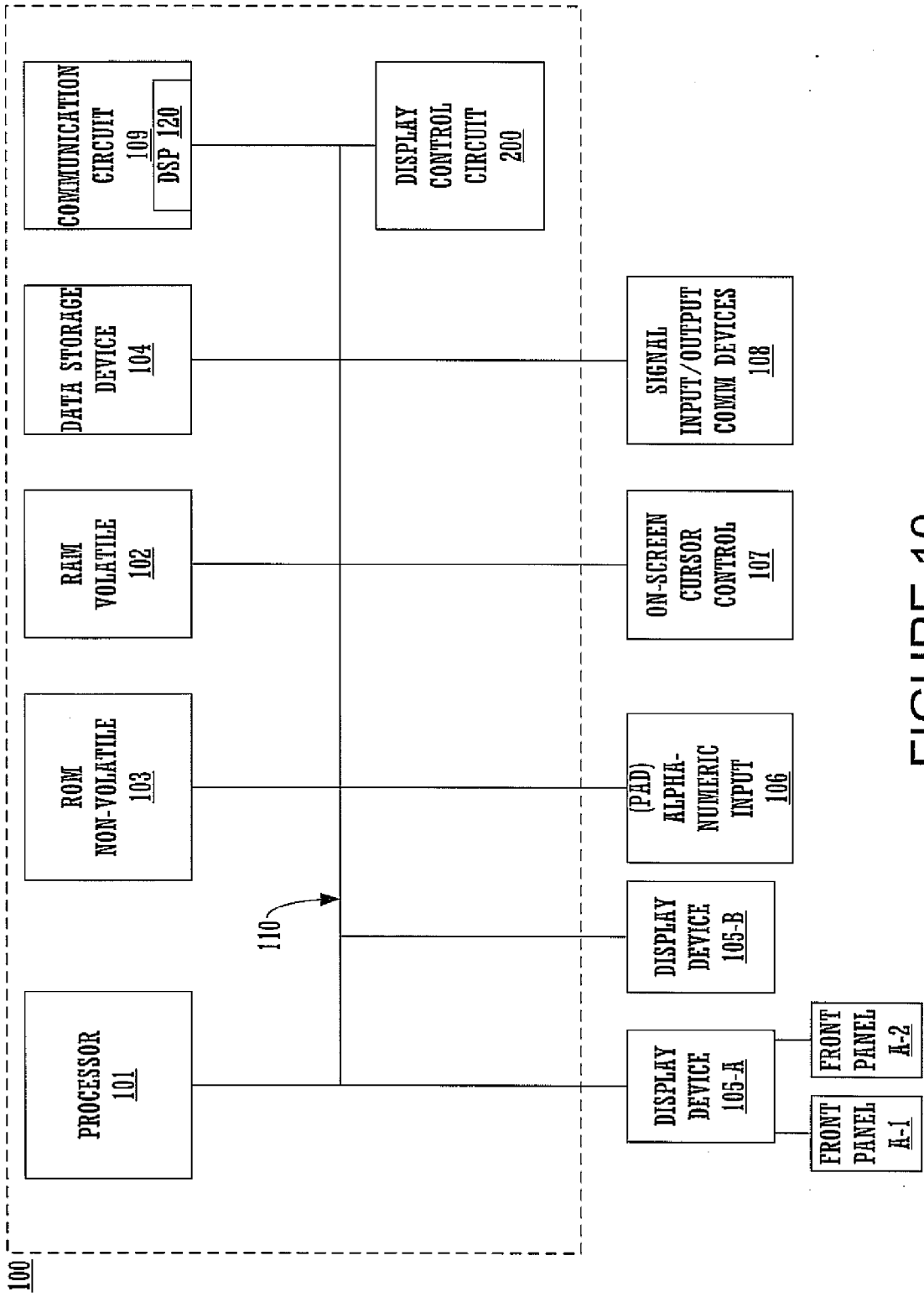
100
PROCESSOR 101
ROM NON-VOLATILE 103
RAM VOLATILE 102
DATA STORAGE DEVICE 104
COMMUNICATION CIRCUIT 109
DSP 120
110
DISPLAY CONTROL CIRCUIT 200
DISPLAY DEVICE 105-A
DISPLAY DEVICE 105-B
(PAD) ALPHA-NUMERIC INPUT 106
ON-SCREEN CURSOR CONTROL 107
SIGNAL INPUT/OUTPUT COMM DEVICES 108
FRONT PANEL A-1
FRONT PANEL A-2

FIGURE 10