FIG. 16

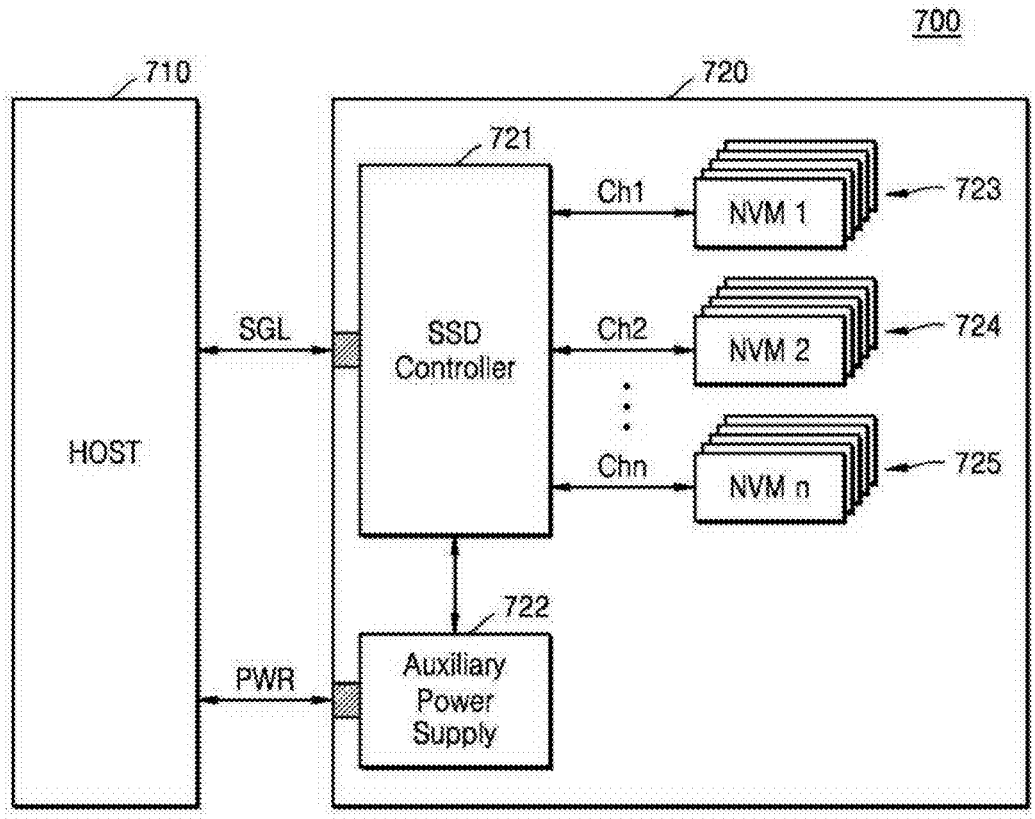
700
710
720
721
HOST
SGL
PWR
SSD
Controller
Ch1
Ch2
Chn
NVM 1
NVM 2
NVM n
723
724
725
722
Auxiliary
Power
Supply