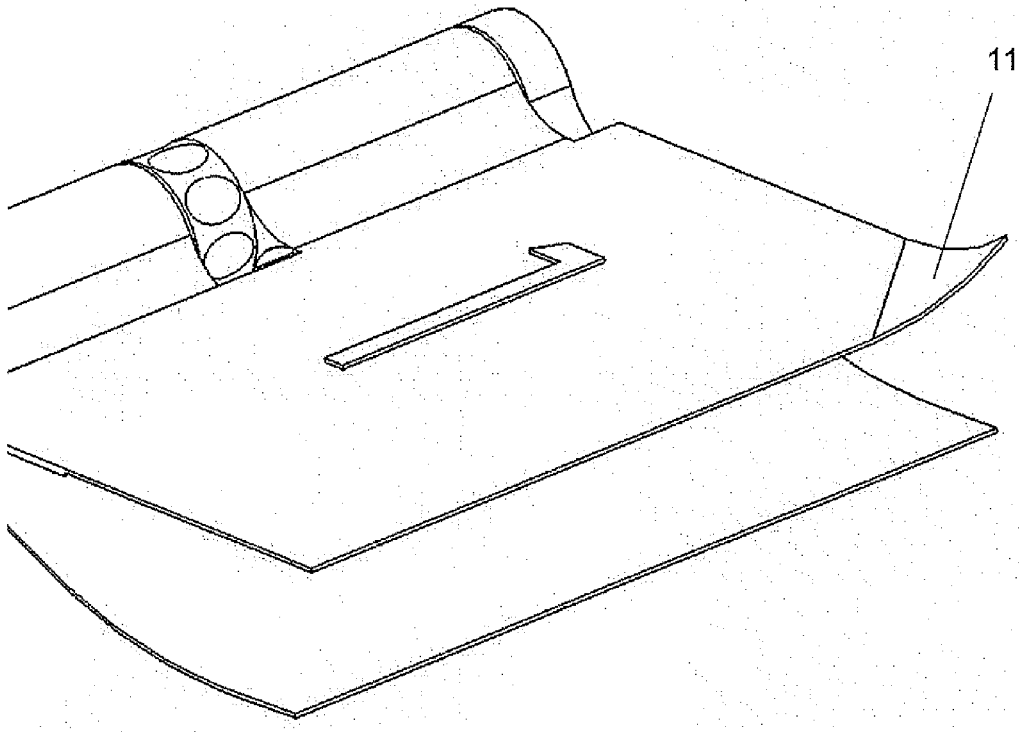

Figure 7

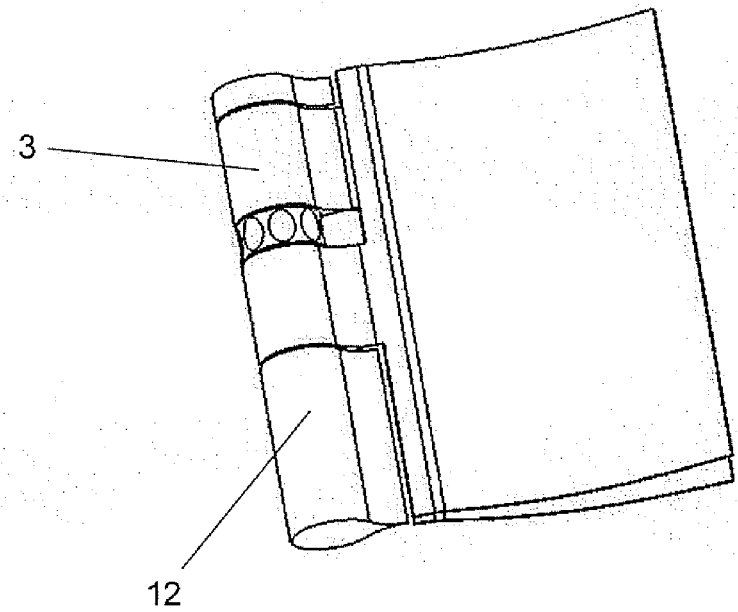

Figure 8