US 20140183585A1

(19) United States

(12) Patent Application Publication

(10) Pub. No.: US 2014/0183585 A1

(43) Pub. Date: Jul. 3, 2014

Gubser et al.

(54) **FABRICATION OF OPTICAL ELEMENTS AND MODULES INCORPORATING THE SAME**

(71) Applicant: **Heptagon Micro Optics Pte. Ltd.**, Singapore (SG)

(72) Inventors: **Simon Gubser**, Adliswil (CH); **Hakan Karpuz**, Au (CH)

(73) Assignee: **Heptagon Micro Optics Pte. Ltd.**, Singapore (SG)

(21) Appl. No.: **14/140,712**

(22) Filed: **Dec. 26, 2013**

Related U.S. Application Data

(60) Provisional application No. 61/746,347, filed on Dec. 27, 2012.

Publication Classification

(51) **Int. Cl.**

H01L 31/0232 (2006.01)

H01L 33/58 (2006.01)

(52) **U.S. Cl.**

CPC ***H01L 31/02325*** (2013.01); ***H01L 33/58*** (2013.01)

USPC **257/98**; 438/29; 438/69; 257/432

(57) **ABSTRACT**
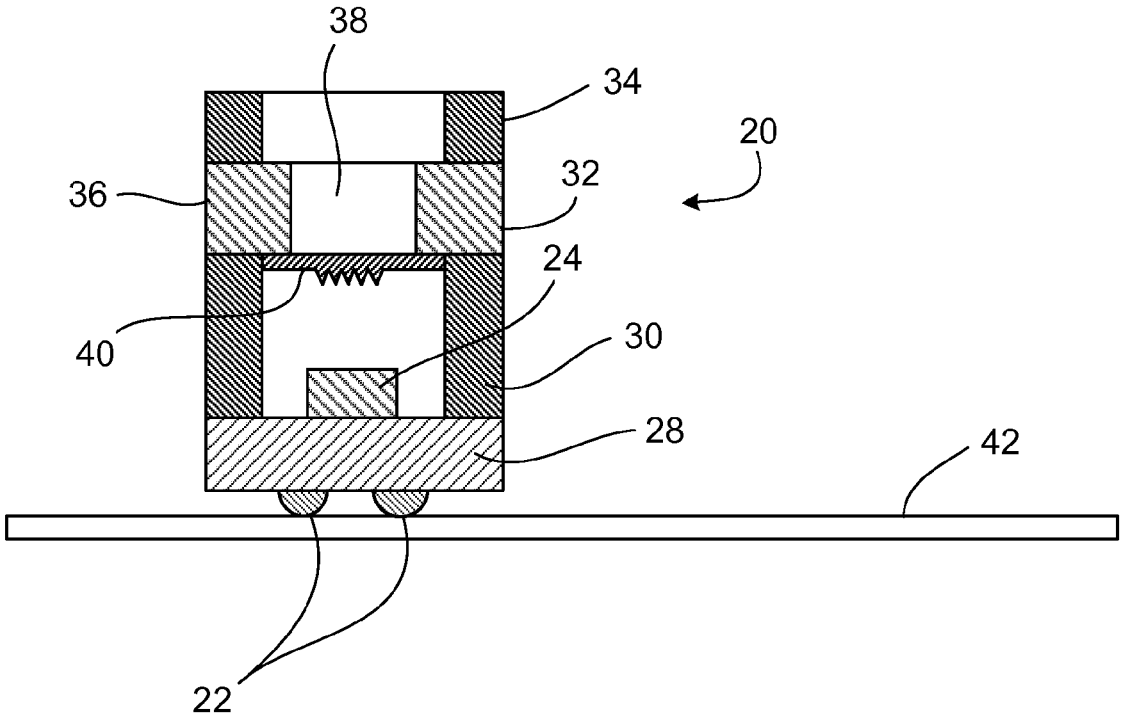
Fabricating a wafer-scale spacer/optics structure includes replicating optical replication elements and spacer replication sections directly onto an optics wafer (or other wafer) using a single replication tool. The replicated optical elements and spacer elements can be composed of the same or different materials.