FIG. 1

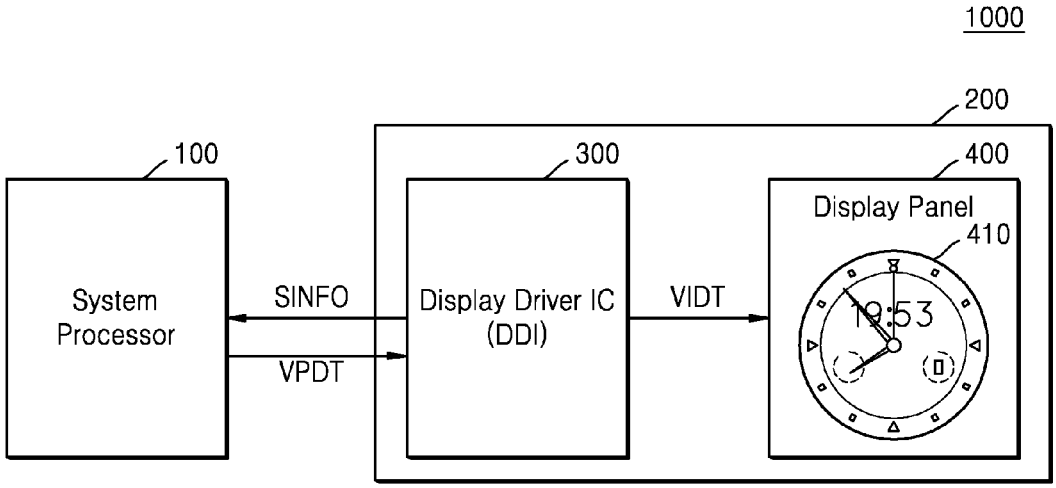
1000
200
100
System Processor
SINFO
VPDT
300
Display Driver IC (DDI)
VIDT
400
Display Panel
410
19:53