FIG. 3

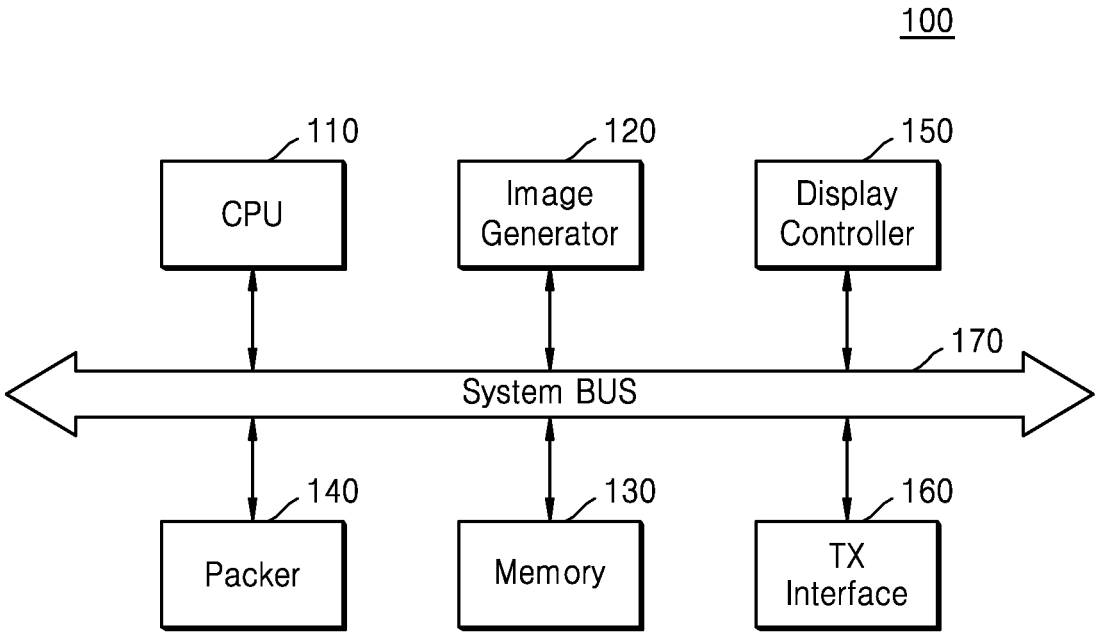
100
110
CPU
120
Image Generator
150
Display Controller
170
System BUS
140
Packer
130
Memory
160
TX Interface