US 20170240085A1

(19) United States

(12) Patent Application Publication

FERREIRA ORTA et al.

(10) Pub. No.: US 2017/0240085 A1

(43) Pub. Date: Aug. 24, 2017

(54) VEHICLE BEVERAGE HOLDER ASSEMBLY

(71) Applicant: **Ford Global Technologies, LLC**, Dearborn, MI (US)

(72) Inventors: **Miguel David FERREIRA ORTA**, Toluca Estado (MX); **Adrian DIAZ MORALES**, Mexico City DF (MX)

(21) Appl. No.: **15/051,770**

(22) Filed: **Feb. 24, 2016**

Publication Classification

(51) **Int. Cl.**
B60N 3/10 (2006.01)

(52) **U.S. Cl.**
CPC ***B60N 3/10*** (2013.01)

(57) **ABSTRACT**
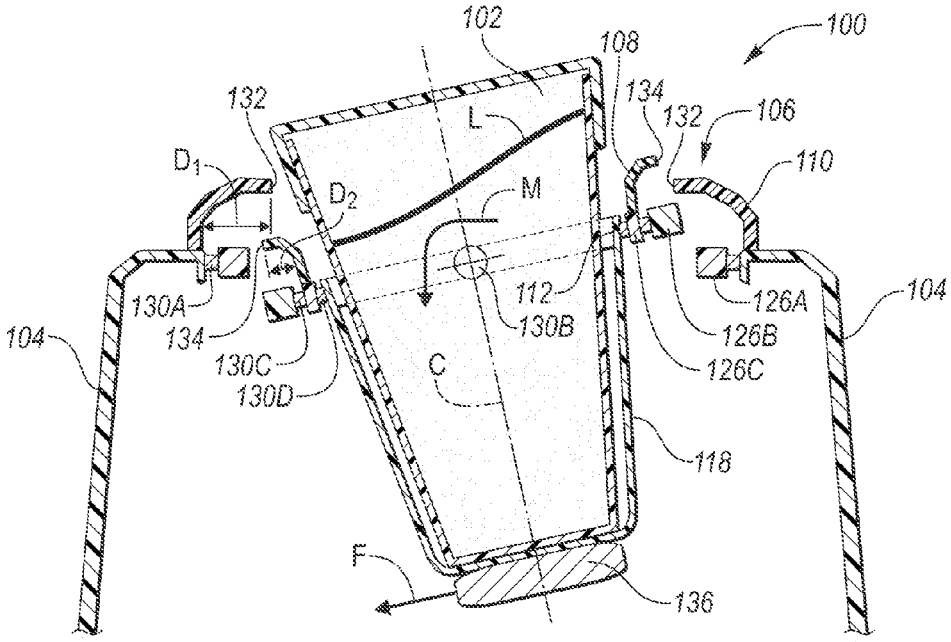
A beverage container holder may include a beverage container receptacle, a gimbal set including outer, middle and inner gimbals surrounding and connected to the receptacle to correct a position of the receptacle in response to an external force, and an inner cover extending from the inner gimbal and having a first position extending over at least a portion of the middle gimbal and a second position contacting the middle gimbal to inhibit the external force.