US 20170102485A1

(19) United States

(12) Patent Application Publication

HA et al.

(10) Pub. No.: US 2017/0102485 A1

(43) Pub. Date: Apr. 13, 2017

(54) **OPTICAL ELEMENT OF LED DISPLAY APPARATUS AND LED DISPLAY APPARATUS**

(71) Applicant: **SAMSUNG ELECTRONICS CO., LTD.**, Suwon-si (KR)

(72) Inventors: **Tae-hyeun HA**, Suwon-si (KR); **Jae-sang KIM**, Seoul (KR); **Jae-heon NOH**, Hwaseong-si (KR)

(73) Assignee: **SAMSUNG ELECTRONICS CO., LTD.**, Suwon-si (KR)

(21) Appl. No.: **15/266,582**

(22) Filed: **Sep. 15, 2016**

(30) **Foreign Application Priority Data**

Oct. 12, 2015 (KR) 10-2015-0142130

Publication Classification

(51) **Int. Cl.**

G02B 3/00	(2006.01)
G09F 19/12	(2006.01)
H01L 33/58	(2006.01)
G09F 13/22	(2006.01)
H01L 25/075	(2006.01)
H01L 33/62	(2006.01)

(52) **U.S. Cl.**

CPC ***G02B 3/0056*** (2013.01); ***H01L 25/0753*** (2013.01); ***H01L 33/62*** (2013.01); ***H01L 33/58*** (2013.01); ***G09F 13/22*** (2013.01); ***G09F 19/12*** (2013.01); *G09F 2013/222* (2013.01)

(57) **ABSTRACT**
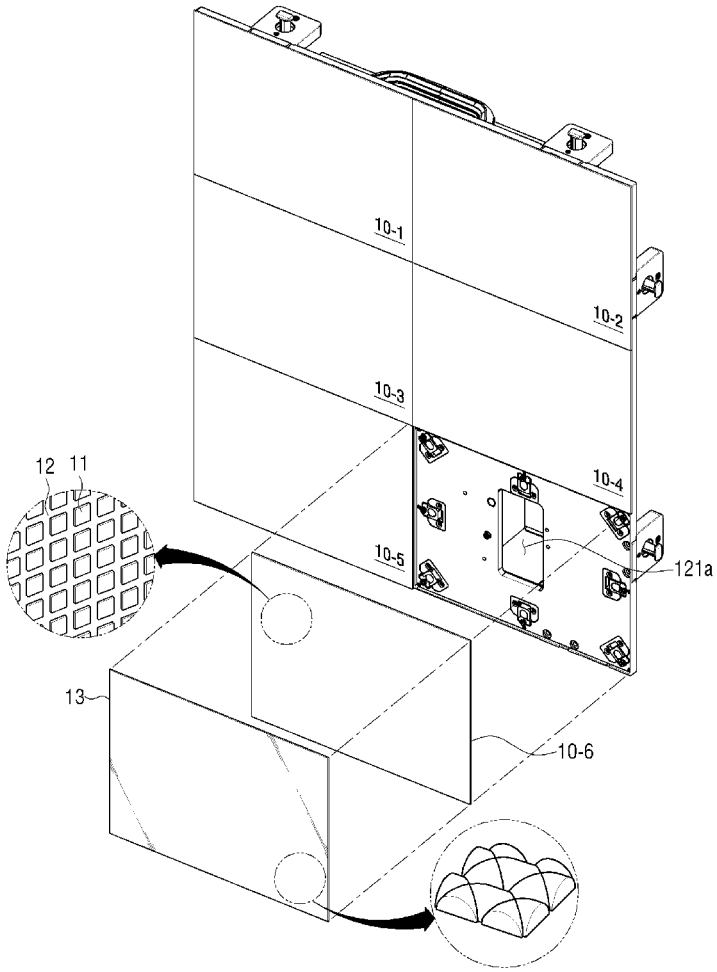
A light emitting diode (LED) display apparatus is provided. The LED display apparatus includes an LED module comprising a plurality of LEDs mounted on a circuit board; and an optical film comprising a plurality of unit lenses configured to cover the LED module and transmit light emitted from the plurality of LEDs, wherein at least one of the plurality of unit lenses has a cross-lenticular lens shape or a cross-prismatic lens shape.