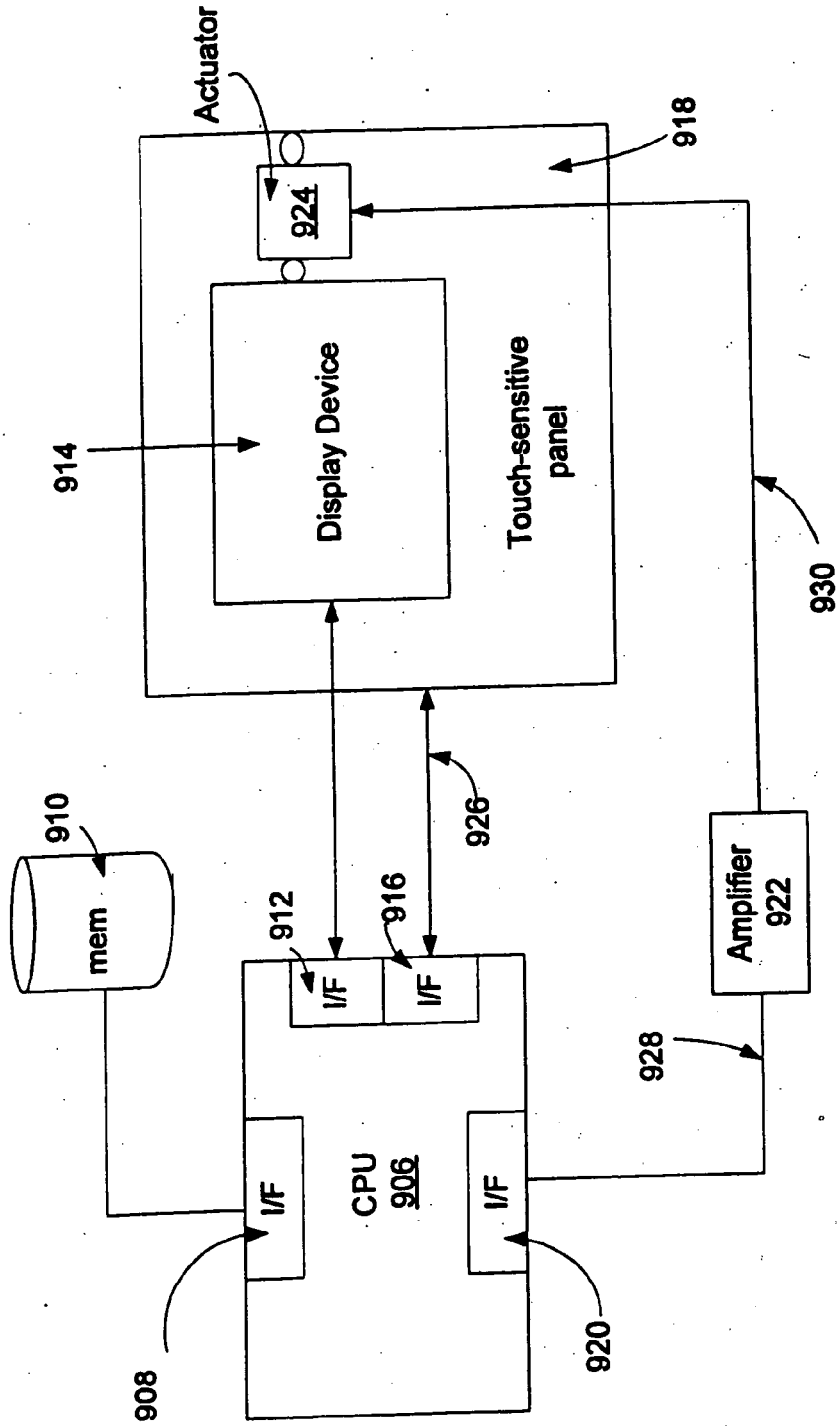
Actuator
924
918
914
Display Device
Touch-sensitive panel
930
926
910
mem
912
916
I/F
I/F
Amplifier 922
928
CPU 906
I/F
I/F
908
920

FIG. 28