Fig. 11

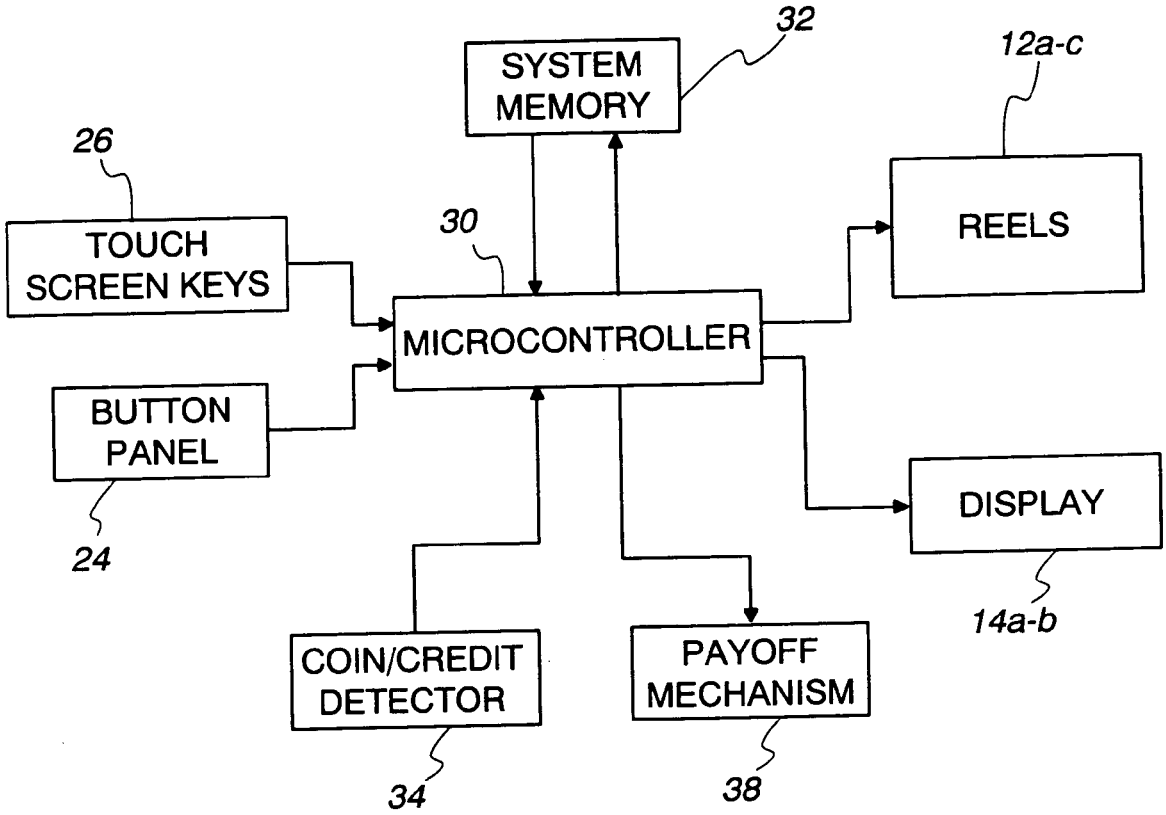
SYSTEM MEMORY
32
12a-c
26
TOUCH SCREEN KEYS
30
REELS
MICROCONTROLLER
BUTTON PANEL
DISPLAY
24
14a-b
COIN/CREDIT DETECTOR
PAYOFF MECHANISM
34
38