FIG. 34

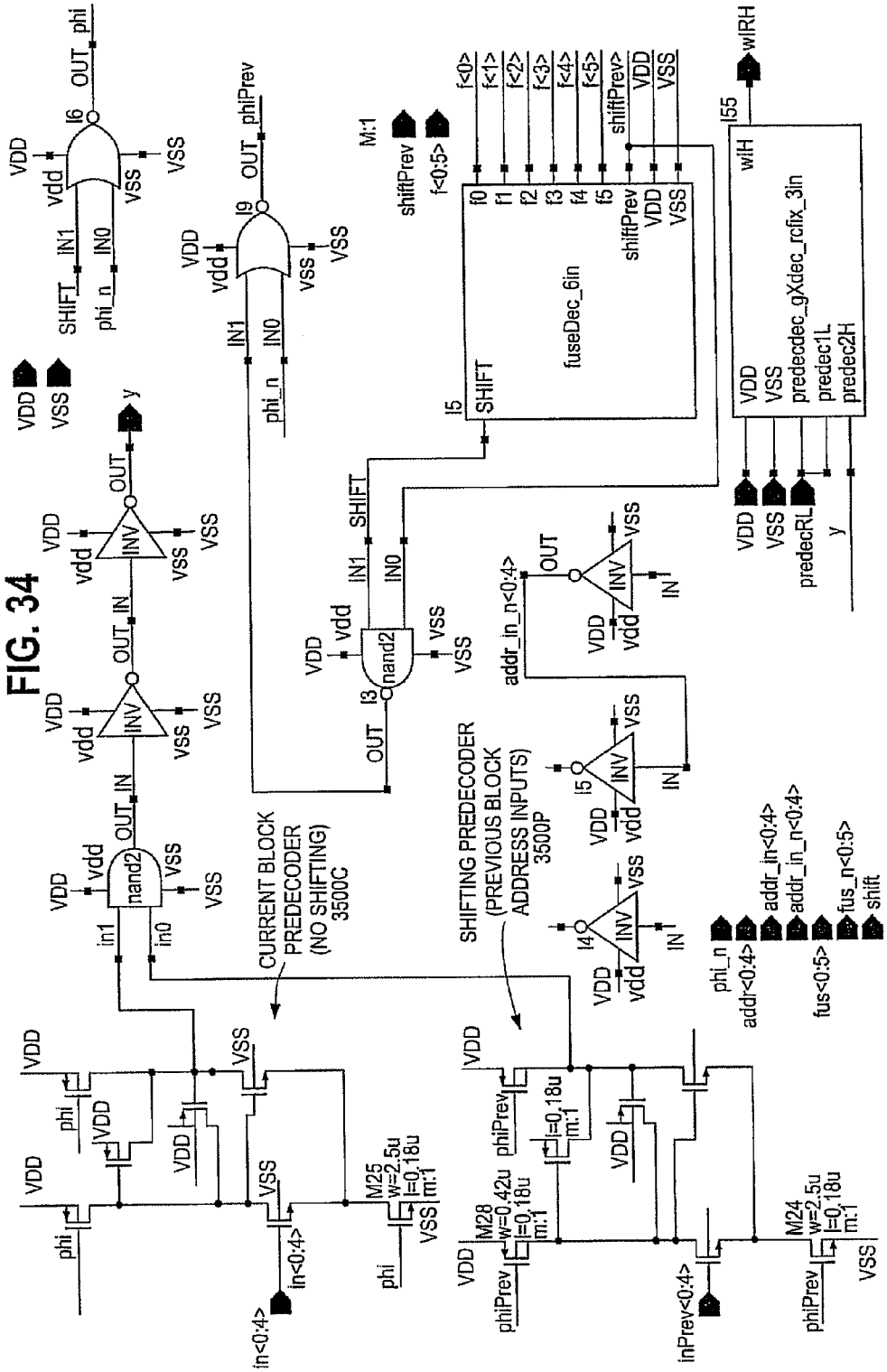
CURRENT BLOCK PREDECODER (NO SHIFTING) 3500C
SHIFTING PREDECODER (PREVIOUS BLOCK ADDRESS INPUTS) 3500P
fuseDec_6in
predecdec_gXdec_rcfix_3in
M:1
shiftPrev
f<0:5>
f<0>
f<1>
f<2>
f<3>
f<4>
f<5>
shiftPrev>
wIRH
wIH
predecRL
y
SHIFT
phi_n
phi
phiPrev
in<0:4>
inPrev<0:4>
addr_in<0:4>
addr_in_n<0:4>
fus<0:5>
fus_n<0:5>
shift
M25 w=2.5u l=0.18u m:1
M28 w=0.42u l=0.18u m:1
M24 w=2.5u l=0.18u m:1
nand2
INV
OUT_IN
OUT
VDD
VSS
vdd
in1
in0
IN1
IN0
I3
I4
I5
I6
I9
I55