US 20100109486A1

(19) United States

(12) Patent Application Publication

POLYAKOV et al.

(10) Pub. No.: US 2010/0109486 A1

(43) Pub. Date: May 6, 2010

(54) **SURFACE DEFORMATION ELECTROACTIVE POLYMER TRANSDUCERS**

(75) Inventors: **Ilya POLYAKOV**, San Francisco, CA (US); **Chris A. WEABER**, Montara, CA (US)

Correspondence Address:
LEVINE BAGADE HAN LLP
2400 GENG ROAD, SUITE 120
PALO ALTO, CA 94303 (US)

(73) Assignee: **ARTIFICIAL MUSCLE, INC.**, Sunnyvale, CA (US)

(21) Appl. No.: **12/358,142**

(22) Filed: **Jan. 22, 2009**

Related U.S. Application Data

(60) Provisional application No. 61/111,648, filed on Nov. 5, 2008.

Publication Classification

(51) **Int. Cl.**

H01L 41/04	(2006.01)
H01L 41/26	(2006.01)
G06F 3/041	(2006.01)

(52) **U.S. Cl.** **310/365**; 29/25.35; 345/173

(57) **ABSTRACT**
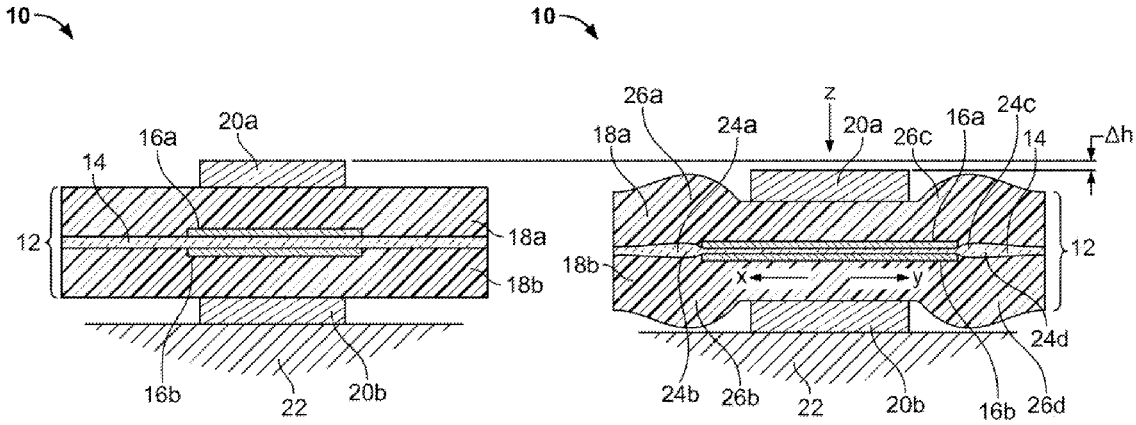
Electroactive polymer transducers configured for surface mode deformation to provide thickness mode actuation.