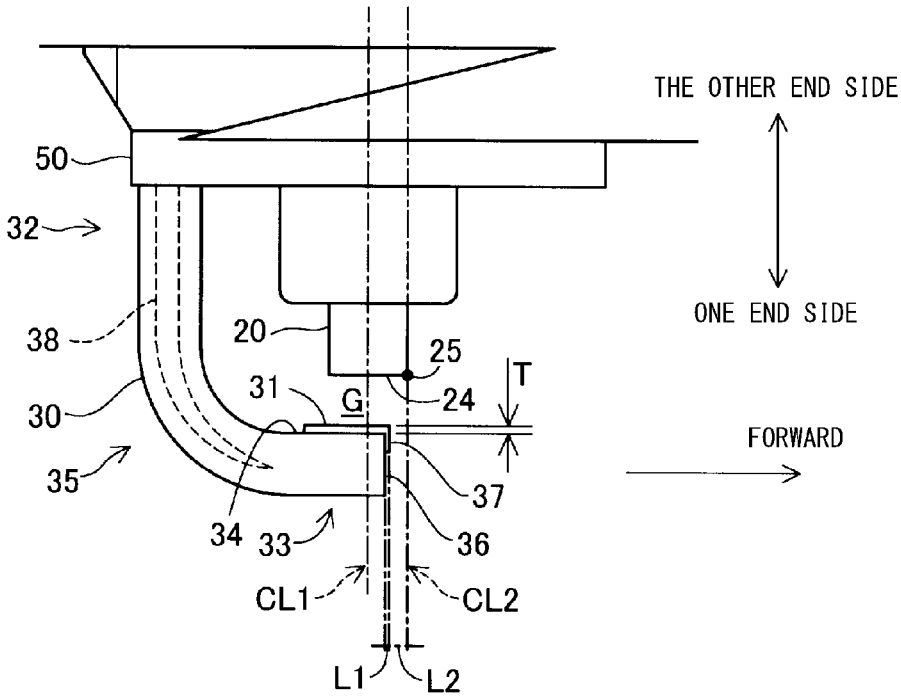
THE OTHER END SIDE
ONE END SIDE
FORWARD
50
32
38
30
35
20
25
24
T
31
G
37
34
33
36
CL1
CL2
L1
L2

FIG. 2

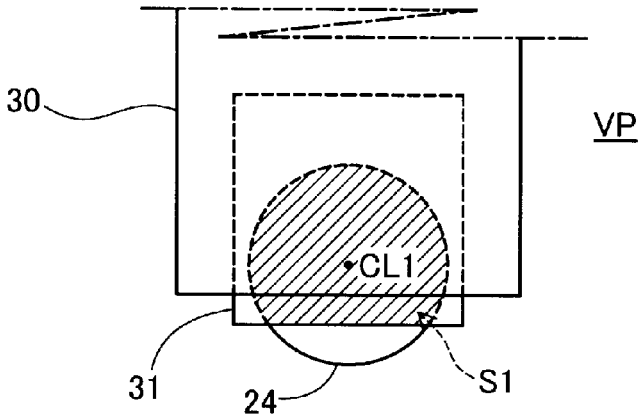
30
VP
CL1
31
24
S1

FIG. 3