FIG. 1

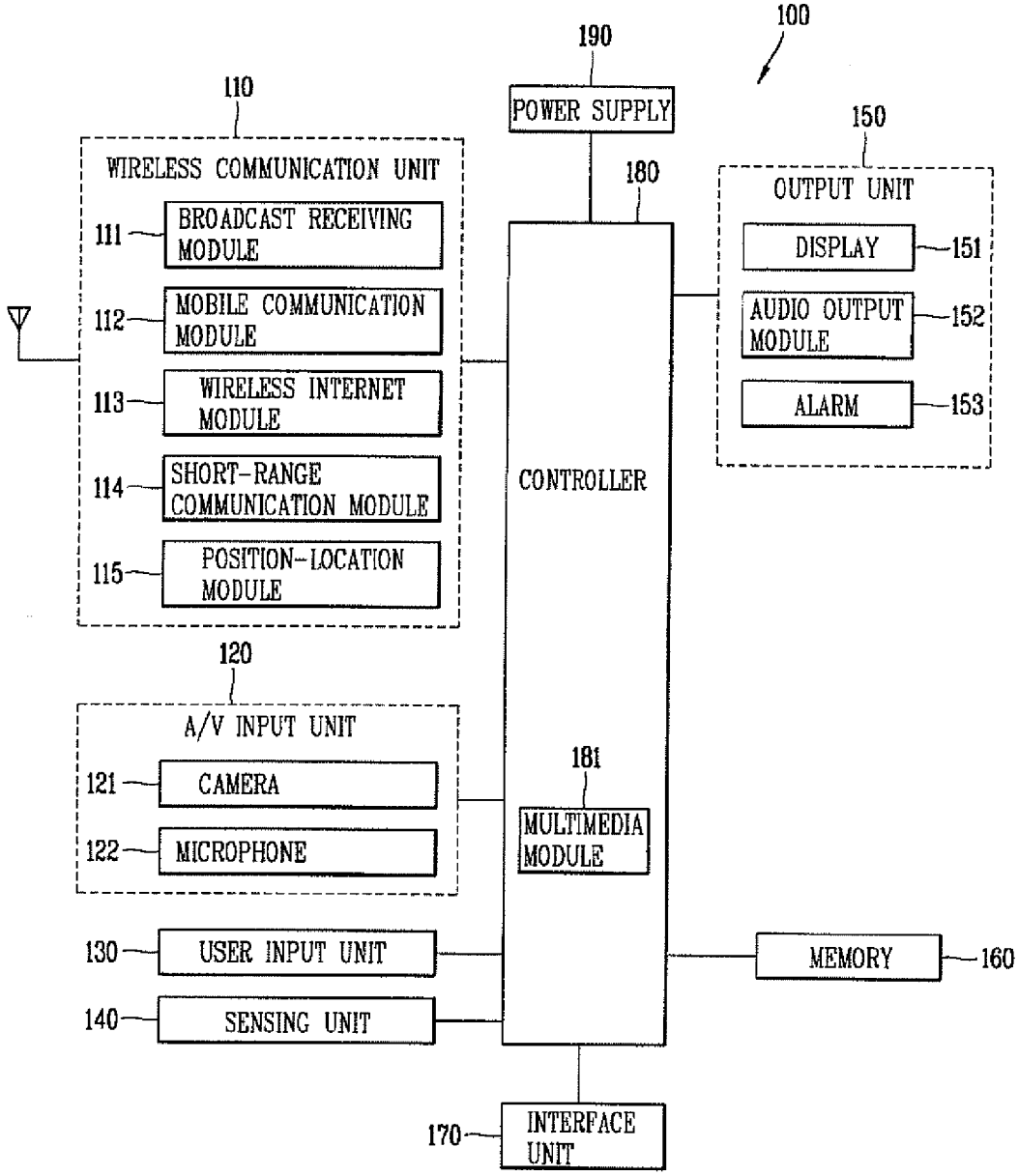
100
190
POWER SUPPLY
110
WIRELESS COMMUNICATION UNIT
111
BROADCAST RECEIVING MODULE
112
MOBILE COMMUNICATION MODULE
113
WIRELESS INTERNET MODULE
114
SHORT-RANGE COMMUNICATION MODULE
115
POSITION-LOCATION MODULE
180
CONTROLLER
150
OUTPUT UNIT
DISPLAY
151
AUDIO OUTPUT MODULE
152
ALARM
153
120
A/V INPUT UNIT
121
CAMERA
122
MICROPHONE
181
MULTIMEDIA MODULE
130
USER INPUT UNIT
140
SENSING UNIT
MEMORY
160
170
INTERFACE UNIT